PIONEER
The Art of Entertainment

Service Manual

● DEH-615RDS/EW

ORDER NO.
CRT1622

HIGH POWER CD PLAYER WITH RDS TUNER

DEH-615RDS EW, X1B/EW
DEH-515RDS EW, X1B/EW

COMPACT disc DIGITAL AUDIO

NOTE:

- **This additional service manual is designed to be used together with Model DEH-605RDS/EW Service Manual CRT1563. Refer to it for finding parts numbers and adjustment, etc. which are not shown in this manual.**
- **See the service manual CX-540(CRT1574) for the CD mechanism description, disassembly and circuit description.**
- **The CD mechanism employed in this model is one of CX-540 series.**

CONTENTS

1. ELECTRICAL PARTS LIST 2
2. CIRCUIT DIAGRAM AND PATTERN
 2.1 CD MECHANISM MODULE 20
 2.2 TUNER AMP UNIT 26
 2.3 KEY BOARD UNIT 31
 2.4 TUNER UNIT 35
3. CHASSIS EXPLODED VIEW 39
4. CD MECHANISM MODULE EXPLODED VIEW 42
5. PACKING METHOD 46

PIONEER ELECTRONIC CORPORATION 4-1, Meguro 1-Chome, Meguro-ku, Tokyo 153, Japan
PIONEER ELECTRONICS SERVICE INC. P.O.Box 1760, Long Beach, California 90801 U.S.A.
PIONEER ELECTRONICS OF CANADA, INC. 300 Allstate Parkway Markham, Ontario L3R OP2 Canada
PIONEER ELECTRONIC [EUROPE] N.V. Haven 1087 Keetberglaan 1, 9120 Melsele, Belgium
PIONEER ELECTRONICS AUSTRALIA PTY.LTD. 178-184 Boundary Road, Braeside, Victoria 3195, Australia TEL:[03]580-9911

© **PIONEER ELECTRONIC CORPORATION 1994**

K-FFD.OCT. 1994 Printed in Japan

1. ELECTRICAL PARTS LIST

NOTE:

- Parts whose parts numbers are omitted are subject to being not supplied.
- The part numbers shown below indicate chip components.

Chip Resistor

RS1/○S○○○J,RS1/○○S○○○J

Chip Capacitor (except for CQS.....)

CKS....., CCS....., CSZS.....

=====Circuit Symbol & No. Part Name=====										Part No.
Unit Number : CWE1374										
Unit Name : Tuner Unit										
MISCELLANEOUS										
IC 1										PA2021B
IC 2										PA2022B
Q 1										3SK195
Q 2	202									2SC2712
Q 3										DTC124EU
Q 51										DTC124TU
Q 52										2SC4207
Q 53										2SA1586
Q 152										XP4601PA
Q 201										2SK435
D 1										1SV172
D 2	3	4								KV1410
D 5										MA151WK-MT
D 6	151	202								MA157-MR
D 201										MA157-MR
D 203										SVC203CP
L 1										Inductor LCTBR12K2125
L 2	52									Ferri-Inductor LAU150K
L 51										Ferri-Inductor LAU2R2K
L 201										Ferri-Inductor LAU4R7K
L 202										Inductor 1mH CTF1026
L 203										Inductor LAU390K
L 204										Ferri-Inductor LAU680K
L 205										Ferri-Inductor LAU330K
L 206										Inductor CTF1198
T 1										Coil CTC1078
T 2										Coil CTE1077
T 3										Coil CTC1077
T 4										Coil CTC1079
T 51										Coil CTC1119
T 202										Coil CTB1102
T 203										Coil CTE1076
T 204										Coil CTE1085
T 205										Coil CTE1086
CF 1	51	52								CTF1292
CF 201										Ceramic Filter CTF1291
CF 202										CTF1300
X 151										CSS1308
X 201										Crystal Resonator CSS1111
VR 51										Semi-fixed 47kΩ (B) CCP1210
VR 52										Semi-fixed 68kΩ (B) CCP1211
VR 151										Semi-fixed 10kΩ (B) CCP1206
VR 152										Semi-fixed 22kΩ (B) CCP1208
AR 1										Capacitor with Discharge Gap DSP-201M
RESISTORS										
R 1										RS1/16S223J
R 2										RS1/16S271J
R 3	10	16	18	20						RS1/16S223J
R 4										RS1/16S0R0J
R 6										RS1/16S680J
R 7	14									RS1/16S563J
R 8										RS1/16S152J
R 9										RS1/16S473J
R 11										RS1/16S474J
R 12										RS1/16S123J
R 13	15	217								RS1/16S563J
R 17	206									RS1/16S102J
R 21	22									RS1/16S560J
R 51										RS1/16S391J
R 52										RS1/16S182J
R 53										RS1/16S751J
R 55	157									RS1/16S682J
R 56										RS1/16S332J
R 58	203									RS1/16S102J
R 60										RS1/16S123J
R 72	74									RS1/16S391J
R 73										RS1/16S681J
R 101	164									RS1/16S224J
R 102	104	209	222							RS1/16S822J
R 103										RS1/16S563J
R 151	152									RS1/16S272J
R 153	202									RS1/16S103J
R 154										RS1/16S822J
R 155										RS1/16S123J
R 156										RS1/16S153J
R 158										RS1/16S183J
R 159	216									RS1/16S103J
R 160	161	207								RS1/16S225J
R 162	221									RS1/16S473J
R 163										RS1/16S222J
R 204	213									RS1/16S222J
R 205										RS1/16S823J
R 208										RS1/16S752J
R 214	218									RS1/16S333J
R 215										RS1/16S330J
R 220										RS1/16S100J
CAPACITORS										
C 1										CCSRCH220J50
C 2										CCSRCH390J50
C 3	101	102	154	163	203	210	219	220	225	CKSQYB473K16
C 4										CCSRTH070D50
C 5	53									CCSRCH270J50
C 6										CKSRYB222K50
C 7										CCSRCH040C50
C 8	105									CKSRYB222K50
C 9	16									CCSRCH470J50
C 10										CCSRSH090D50
C 11										CKSRYB223K25
C 12										CCSRCH070D50
C 13										CCSRCH070D50
C 14	19	20	21	62	71	74	201	207	209	CKSRYB103K50
C 15	22	65	151	164	227					CKSQYB104K25

=====Circuit Symbol & No.	Part Name=====		Part No.
C 17			CCSRRH100D50
C 18			CCSRRH080D50
C 23			CEA3R3M50LL
C 24 29 73 106 152 153 213 236			CKSRYB223K25
C 25			CKSRYB682K50
C 26 28 231			CEA101M16LL
C 51 52 166 223			CKSRYB103K50
C 54			CCSRCH270J50
C 55			CKSQYB104K25
C 56 162 211			CEA010M50LL
C 57 64 66 237			CCSRCH101J50
C 60 155			CKSYB474K16
C 61			CEAR22M50LL
C 63 161			CKSQYB104K25
C 103			CKSQYB222K50
C 104			CEA010M50LL
C 156			CKSQYB563K16
C 158 212			CEA100M16LL
C 159			CKSRYB331K50
C 160			CKSYB105K16
C 165			CSZS2R2M10
C 202 233			CKSRYB332K50
C 204			CCSRCH120J50
C 205			CCSRCH560J50
C 206 221			CCSRCH680J50
C 208			CEA470M10LL
C 214 230			CKSRYB472K50
C 215 228			CKSRYB103K50
C 216			CCSRCH100D50
C 217			CCSRCH221J50
C 218 234			CEA220M16LL
C 222			CCSRCH150J50
C 224			CCSRUJ181J50
C 226			CEA4R7M35LL
C 229			CEAR68M50LL
C 232			CCSRCH390J50
C 235			CKSQYB473K16

Unit Number : CWX1773
Unit Name : Key Board Unit

MISCELLANEOUS

IC 901			PDX002A
IC 902			RPM-678CBR
Q 901 902			2SB1132
Q 903			UN2211
D 901 902			DA204K
D 903			MA3051L
L 901		Coil	LCTB150K3216
X 901			CSS1084
IL 901 902 903		Lamp 14V 40mA	CEL1398
IL 904 905 906		Lamp 14V 40mA	CEL1397
LCD901		LCD	CAW1309

RESISTORS

R 901 902 903 908			RS1/8S222J
R 904 906			RS1/10S472J
R 905 907			RS1/10S332J
R 916 917 918 919			RS1/10S471J
R 948			RS1/10S470J

CAPACITORS

C 901 902 903 904			CKSQYB103K25
C 905			CEA470M6R3LS

=====Circuit Symbol & No.	Part Name=====		Part No.
Unit Number : CWX1796			
Unit Name : Control Unit			

MISCELLANEOUS

IC 1001			UPC2571GS
IC 1201			UPD63700GF1
IC 1301			PA3026
IC 1302			XRA6285FP
IC 1303			NJM4558M
IC 1601			TC9268F
IC 1602			TA2063F
IC 1701			PQ05TZ51
Q 1001			2SB1260
Q 1601 1602			2SD1781K
Q 1603			2SB709A
D 1601			MA151WA-MN
D 1701 1702 1703 1704			SC016-2
D 1801 1802		Chip LED	CL200IRX
L 1601		Inductor	LCTBR39K2125
X 1601		Crystal Resonator	CSS1067
S 1801 1802		Switch(Home,Clamp)	CSN1028
VR1001		Semi-fixed 2.2kΩ(B)	CCP1177
VR1002		Semi-fixed 22kΩ(B)	CCP1183
VR1003 1004		Semi-fixed 47kΩ(B)	CCP1185

RESISTORS

R 1001			RS1/8S100J
R 1002			RS1/8S120J
R 1003 1201 1307 1309			RS1/16S103J
R 1004 1013 1024 1025 1311 1315 1318 1708			RS1/16S102J
R 1005			RS1/16S823J
R 1006			RS1/16S182J
R 1007			RS1/16S333J
R 1011 1012			RS1/16S683J
R 1014 1310			RS1/16S473J
R 1018			RS1/16S622J
R 1019			RS1/16S563J
R 1020			RS1/16S622J
R 1021			RS1/16S513J
R 1022			RS1/16S133J
R 1027			RS1/16S183J
R 1028			RS1/16S822J
R 1301 1302			RS1/16S222J
R 1303 1606 1607			RS1/16S223J
R 1304			RS1/16S123J
R 1305 1306 1705			RS1/16S332J
R 1308			RS1/16S163J
R 1314			RS1/16S0R0J
R 1317			RS1/16S473J
R 1601			RS1/16S301J
R 1604 1605			RS1/16S102J
R 1608 1609			RS1/16S162J
R 1610			RS1/16S103J
R 1801 1802			RS1/8S821J

CAPACITORS

C 1001 1008 1010 1011 1303			CSRYB102K50
C 1002 1609 1706			CV10□1M6R3
C 1003			CSQYB104K16
C 1004			CV47□0M6R3
C 1005			CSRCH101J50
C 1006			CSRYB561K50
C 1007 1704			CSYB334K16
C 1009			CSRCH181J50
C 1013			CSRYB103K50
C 1014			CSRCH220J50

=====Circuit Symbol & No. Part Name=====	Part No.
C 1015 1016 1017 1018 1201 1202	CKSYF105Z16
C 1021	CKSYB104K16
C 1022	CKSRYB332K50
C 1023	CKSRYB561K50
C 1203	CKSRYB471K50
C 1301 1302	CKSRYF683Z25
C 1304	CKSRYB152K50
C 1305	CKSRYB271K50
C 1307 1310 1605 1608	CKSRYB103K50
C 1308	CKSRYF103Z50
C 1309	CEV470M16
C 1601	CCSRCH151J50
C 1602	CCSRCH100D50
C 1603 1604 1705	CKSYB224K16
C 1606 1607	CCSRCH090D50
C 1612	CEV220M6R3
C 1613 1614	CEV4R7M35
C 1701 1702	CCSRCH100D50
C 1703	CEV220M16
Unit Number : CWX1826	
Unit Name : Tuner Amp Unit	
MISCELLANEOUS	
IC 471	NJM4558L
IC 481	LC7538JMHS
IC 482 483	NJM4558MD
IC 501	LC72140M
IC 551	PA3029B
IC 601	PD4572A
IC 771	CWV1051
IC 961	PAJ001A
IC 971	PA2023A
Q 451 452 502 504 508 771 773	2SC2412K
Q 453 454 455 456	DTC114TK
Q 457	UN2111
Q 501	2SC3295
Q 503	2SC3098
Q 505 509	2SK208
Q 551 601 604 606 864 957 983	DTC114EK
Q 602 863 982	DTA114EK
Q 603 605 956	2SA1674
Q 607	2SA1015
Q 772	DTC124EK
Q 851 852	2SC2412K
Q 861 862	2SC2412K
Q 981	2SD2396
D 501 971	MA151WK-MT
D 504 505	MA3027H
D 771 972 973	1SS133
D 772	MTZ4R7B
D 861	MA151WA-MN
D 951 952 957 961	ERA15-02
D 956	ERA15-10
D 984	HZS9LC3
L 501 Ferri-Inductor	CTF-157
L 502 Ferri-Inductor	LAU220K
L 601 Ferri-Inductor	LAU470K
L 602 Ferri-Inductor	LAU470K
L 603 Ferri-Inductor	LAU470K
TH 601 Thermistor	CCX1008
IB 551 552	CWW1338
IB 601	CWW1336
IB 602	CWW1337
X 501 Crystal Resonator	CSS1011
X 601 Crystal Resonator	CSS1023
VR 771 Semi-fixed 2.2kΩ(B)	VRMB6VS222
Tuner Unit	CWE1374
BZ 601 Buzzer	CPV1011

=====Circuit Symbol & No. Part Name=====	Part No.
RESISTORS	
R 451 452 514 515 521 522 602 604 618 619	RS1/10S473J
R 453 454	RS1/10S0R0J
R 455 456 457 458 463 464 529 533 536 538	RS1/10S102J
R 459 460 505 865 866 952 956	RS1/10S223J
R 471 472	RS1/10S272J
R 473 474	RD1/4PS163JL
R 475 476	RS1/10S273J
R 477 478	RS1/10S331J
R 481 482	RS1/10S272J
R 485 486 487 566 567 568 569	RD1/4PS472JL
R 488 489 490 491 492 493 494 495	RS1/10S103J
R 503 508 509 512 516 530 551 552 553 554	RS1/10S472J
R 504 511 513 534 535 601 603 863	RS1/10S222J
R 506	RS1/10S221J
R 507 974	RS1/10S103J
R 510	RS1/10S123J
R 517 518 519 520	RD1/4PS222JL
R 523	RS1/10S563J
R 524 784	RS1/10S101J
R 525 782	RS1/10S332J
R 526	RS1/10S331J
R 527	RS1/10S821J
R 528	RS1/10S680J
R 531	RS1/8S103J
R 532 781	RS1/10S152J
R 539 540 541 605 606 616 652 657 658 659	RS1/10S102J
R 542	RS1/10S822J
R 545 546	RS1/8S0R0J
R 548	RS1/10S330J
R 549	RD1/4PS102JL
R 555 556	RS1/10S2R2J
R 557	RD1/4PS102JL
R 558 559 560 561 562 563 564 565	RD1/4PS2R2JL
R 570	RD1/4PS752JL
R 571	RS1/10S560J
R 573	RS1/10S682J
R 613	RS1/10S473J
R 617	RS1/8S473J
R 620 963	RS1/10S683J
R 621 634 772 773 774 775 776 777 778	RS1/10S473J
R 622 624	RD1/4PS222JL
R 623 625	RS1/10S473J
R 626	RS1/10S183J
R 627 629 632 957 973 984	RS1/10S472J
R 628 630 958	RD1/4PS272JL
R 633	RD1/4PS472JL
R 645 646 647	RS1/10S472J
R 648	RS1/10S682J
R 651	RD1/4PS102JL
R 653 654 655 656	RS1/10S681J
R 660 662 663 664 780 783 972	RS1/10S102J
R 670 671 672	RD1/4PS472JL
R 673	RD1/4PS103JL
R 771	RS1/10S471J
R 851 852	RD1/4PS821JL
R 853 854	RS1/10S222J
R 855 856	RS1/10S223J
R 861 862	RD1/4PS821JL
R 864	RS1/8S222J
R 951	RS1/10S0R0J
R 959	RD1/4PS513JL
R 961	RS1/8S823J
R 962	RS1/10S363J
R 964	RD1/4PS473JL
R 965	RD1/4PS273JL

=====Circuit Symbol & No. Part Name=====	Part No.
R 966	RS1/10S103J
R 971	RS1/10S104J
R 981	RD1/4PS471JL
R 982	RD1/4PS221JL
R 983	RS1/10S392J
CAPACITORS	
C 451 452	CEAS4R7M25
C 471 472	CEAS100M16
C 473 474	CCSQCH560J50
C 475 951 963 1000 μF/16V	CCH1149
C 476 477	CKSQYB393K25
C 481 482 861	CEAS100M16
C 483 484 485 486 491 492 553 567 568 569	CEA100M16LL
C 487 488	CKSYB224K16
C 489 490	CKSQYB272K50
C 493 494 506 507	CKSQYB223K25
C 495 496	CKSQYB562K50
C 497 498 499 500	CCSQCH330J50
C 501 505 509 512 517	CCSQCH101J50
C 502 607 982	CKSQYB473K25
C 504 510 514 523 772 952 954	CKSQYB103K25
C 511	CCSQCH681J50
C 513	CKLSR473K16
C 515	CFTNA474J50
C 516	CEA4R7M35LL
C 518 519	CCSQCH120J50
C 520 4.7 μF/16V	CCH1165
C 551 552 554 555 606	CKSQYB102K50
C 556 3300 μF/16V	CCH1150
C 557 558 609 956	CKSQYB104K25
C 559 560 561 562 563 564 565 566	CQMA104J50

=====Circuit Symbol & No. Part Name=====	Part No.
C 570 608	CEA100M16LL
C 571 572 573 574	CCSQCH220J50
C 575	CEAS4R7M25
C 601	CKSQYB183K25
C 603	CKSQYB104K25
C 604 605	CCSQCH150J50
C 610	CKSQYB104K25
C 612 613	CKSQYB102K50
C 771	CEAR47M50LL
C 773	CEA100M16LL
C 851	CEAS100M16
C 852	CEA100M16LL
C 853 854	CCSQCH221J50
C 862	CEA100M16LL
C 863 864	CCSQCH221J50
C 962	CEAR22M50LL
C 964	CEA2R2M50LL
C 965	CEA220M6R3LL
C 971	CEA010M50LL
C 972	CEAS470M10
C 973	CEAS101M10
C 974	CEAS221M10
C 975 330 μF/10V	CCH1181
C 981	CEAS331M16
Unit Number :	
Unit Name : Detector P.C.Board	
P 1 2 Photo Transistor	PT4800
Miscellaneous Parts List	
PU Unit	CGY1031
M 1 Motor Unit (Spindle)	CXA5703
M 2 Motor Unit (Carriage)	CXA7150
M 3 Motor Unit (Loading)	CXA6456

● The DEH-615RDS/X1B/EW, DEH-515RDS/EW, and DEH-515RDS/X1B/EW Parts Lists enumerate the parts which differ from those enumerated in the DEH-615RDS/EW Parts List only. The parts other than those enumerated in the former are identical with those in the latter, to which you are requested to refer,accordingly. The DEH-615RDS/EW Parts List is given on page 2.

Tuner Amp Unit

Circuit Symbol & No.	DEH-615RDS/EW, X1B/EW Part No.	DEH-515RDS/EW,X1B/EW Part No.
Q851,852	2SC2412K	·····
R609	·····	RS1/10S0R0J
R613	RS1/10S473J	·····
R851,852	RD1/4PS821JL	·····
R853,854	RS1/10S222J	·····
R855,856	RS1/10S223J	·····
C851	CEAS100M16	·····
C852	CEA100M16LL	·····
C853,854	CCSQCH221J50	·····

Key Board Unit

Circuit Symbol & No.	DEH-615RDS/EW, X1B/EW Part No.	DEH-515RDS/EW,X1B/EW Part No.
IC902	PRM-678CBR	·····
R948	RS1/10S470J	·····
C905	CEA470M6R3LS	·····

● ICs

PA2021B

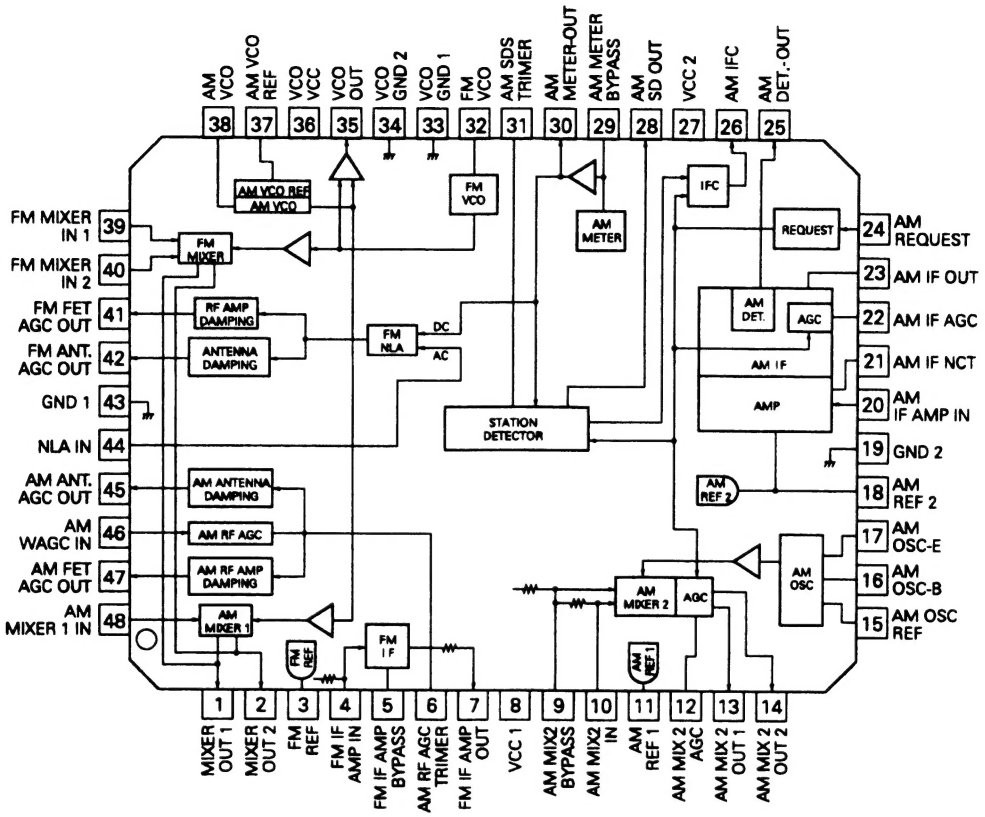

PA2022B

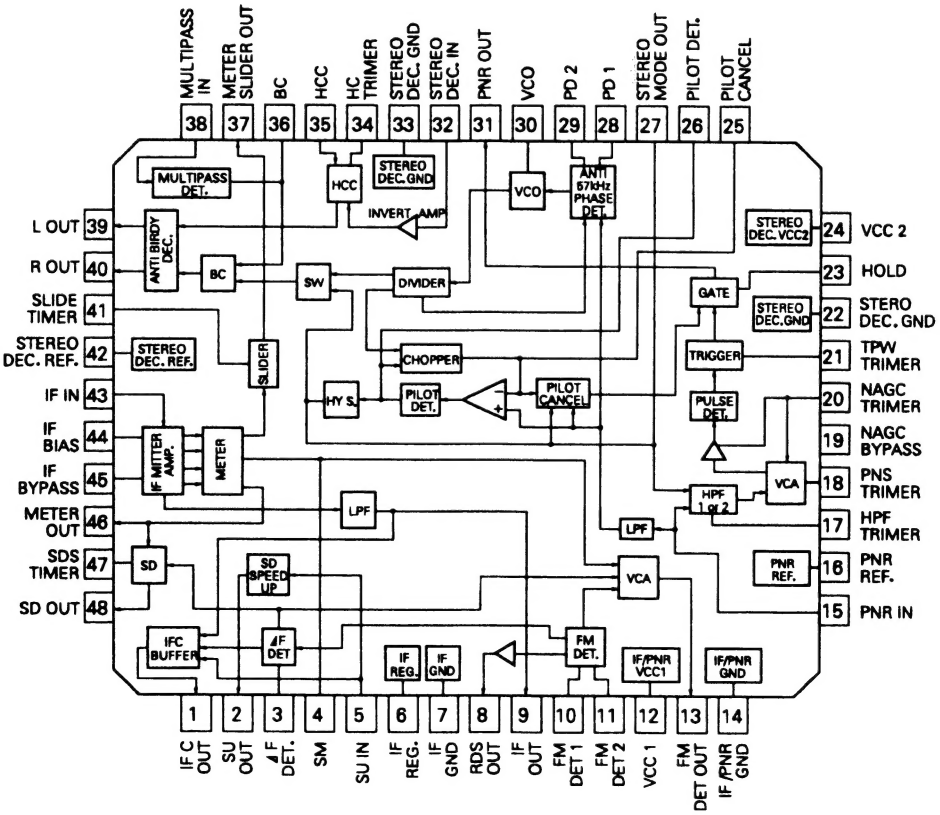

NJM4558L

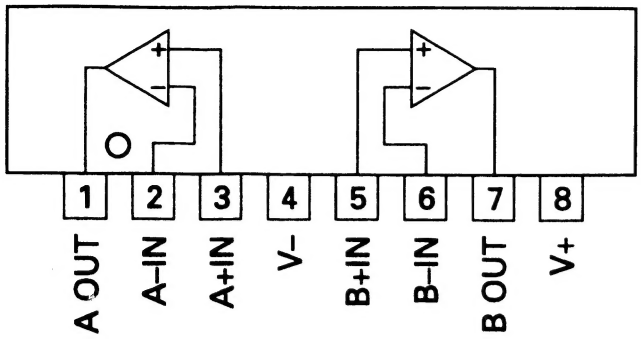

NJM4558MD

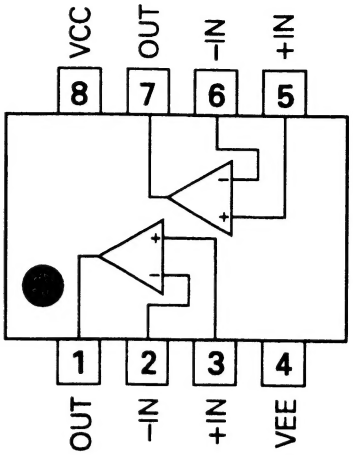

*LC7538JMHS

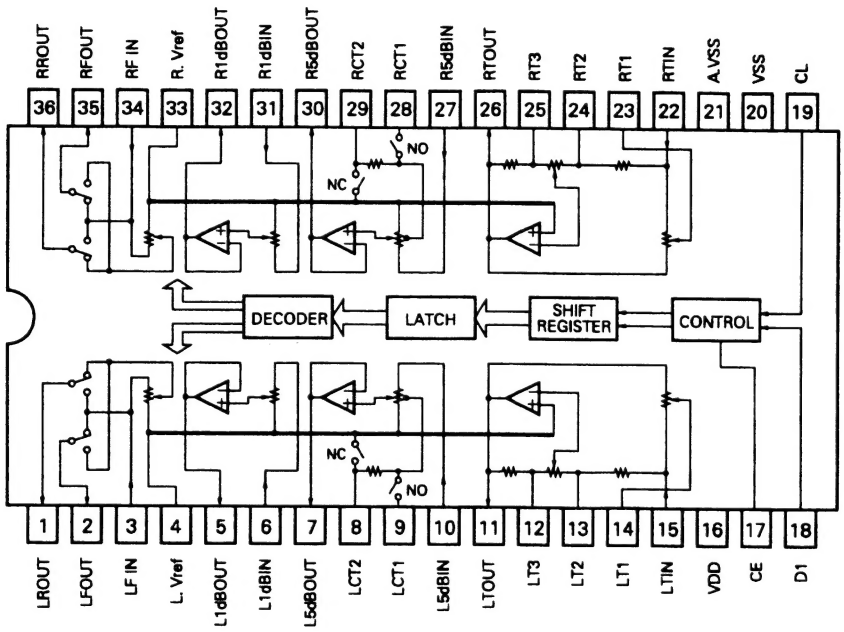

PA3029B

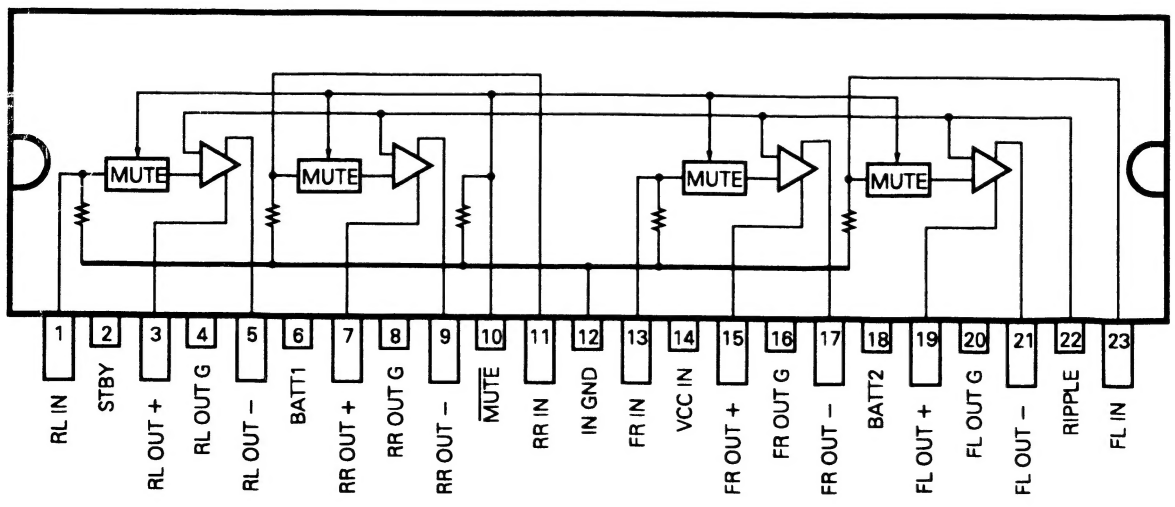

● Pin Functions (CWV1051)

Pin No.	Pin Name	I/O	Function and Operation
1	VDD		Power supply for RDS controller
2	GND		GND
3	RDSRDY	I	Ready input from system control IC
4	$\overline{\text{RDSEN}}$	O	Enable output for system control IC
5	$\overline{\text{RDSCK}}$	I	Serial clock input from system control IC
6-9	RDSDT 7-4	I/O	Data input/output to system control IC
10	RDSSEL	I	Select input from system control IC
11	$\overline{\text{RDSRST}}$	I	Reset input from system control IC
12	SCHK	I	Unit check input
13	TUNSEL	I	FM/AM tuner unit select input
14-16	VACANT		
17	GND		GND
18	COMP	I	FM composite signal input
19	FM 5V(VCC)		Power supply decoder
20	BPF OUT	O	Band pass filter test output
21	SL CHK	O	SL check output
22	FL CHK	O	FL check output
23	SD	I	RDS decode control input
24	SL(FM)	I	Signal level input from tuner
25	$\overline{\text{SK}}$	I	SK signal detect input
26	$\overline{\text{RLOCK}}$	O	RDS test output
27	$\overline{\text{DK}}$	O	DK signal detect output
28	ERROR	O	Disapprove of error correction output
29	CORR	O	Error output
30	RECEIVE	O	RDS synchronizing test output

CWV1051

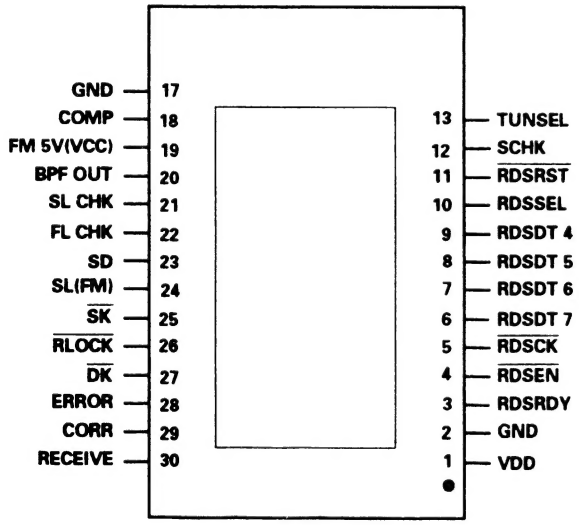

PAJ001A

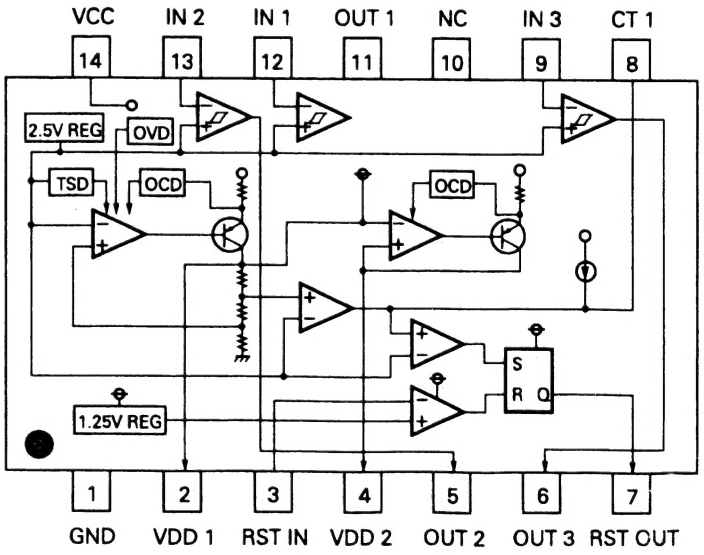

● **Pin Functions(PD4572A)**

Pin No.	Pin Name	I/O	I/O Format	Function and Operation
1	NC			Not used
2	$\overline{\text{RDSRST}}$	O	C	Reset output for RDS IC
3	RDSSEL	O	C	Select output for RDS IC
4	AVSS	I		A/D converter GND
5	$\overline{\text{RDSEN}}$	O	C	Enable output for RDS IC
6	RDSRDY	I		Ready input from RDS IC
7	AVREF1	I		D/A converter reference voltage
8	KYDT	I		Key data input
9	DPDT	O	C	Display data output
10	$\overline{\text{RST}}$	O	C	LSI reset output
11	RDSDI	I		Serial data input for RDS IC
12	RDSDO	O	C	Serial data output for RDS IC
13	$\overline{\text{RDSCK}}$	O	C	Serial clock output for RDS IC
14	XA0	O		Control signal distinguishing data from microcomputer
15	$\overline{\text{XSTB}}$	O	C	LSI strobe output
16	XSI	I		LSI data input
17	XSO	O	C	LSI data output
18	$\overline{\text{XSCK}}$	O	C	LSI clock output
19	CONT	O	C	Servo driver power supply control
20	LOAD	O	C	Loading motor LOAD control
21	EJET	O	C	Loading motor EJECT control
22	CD5VON	O	C	CD +5V control
23	NC			Not used
24	CDMUTE	O	C	CD mute output
25	$\overline{\text{TMUTE}}$	O	C	Tuner mute output
26	VDCONT	I	C	VD control input
27	FOK	I		FOK signal input
28	MIRR	I		Mirror detector input
29	LOCK	I		Spindle lock detector input
30	CLAMP	I		Disc clamp sense input
31	$\overline{\text{HOME}}$	I	C	Home position detector input
32	FECNT	O	C	FE output control pin
33	VSS			GND
34	VDSENS	I		VD over voltage sense input
35	VMC	O	C	Loading motor driver power supply
36	NC			Not used
37	$\overline{\text{ADENA}}$	O	N	A/D converter reference voltage output
38	NC			Not used
39	CDPW	O	N	CD power control
40	NC			Not used
41	SYSPW	O	C	System power supply control output
42	BLGT	O	C	LCD back light control output
43	VLCDPW	O	C	Power supply control output for LCD
44	$\overline{\text{SWVDD}}$	O	C	Key board unit power supply control output
45	PEE	O	C	Beep tone output
46	VDT	O	C	Data output for electronic volume
47	VST	O	C	Strobe pulse output for electronic volume
48	VCK	O	C	Clock output for electronic volume
49	PCL	O	C	Clock adjustment output
50	FM/$\overline{\text{AM}}$	O	C	FM/AM power select output
51	MONO	O	C	Forced mono output
52-55	SIMK0-3	I		Model select input
56	MUTE	O	C	Mute output
57	NC			Not used
58	NC			Not used
59	SD	I		SD input
60	$\overline{\text{RESET}}$	I		Reset input

Pin No.	Pin Name	I/O	I/O Format	Function and Operation
61	NC			Not used
62	$\overline{\text{BSENS}}$	I		Back up power sense input
63	$\overline{\text{ASENS}}$	I		ACC power sense input
64	PDI	I		PLL data input
65	PDO	O	C	Data output for PLL IC
66	PCK	O	C	Serial clock output for PLL IC
67	PCE	O	C	Chip enable output for PLL IC
68	VDD			Power supply
69,70	X2,X1			Crystal oscillator connection pin
71	IC			Connect to GND
72	XT2			Not used
73	TESTIN	I		Test program start input
74	AVDD			Positive power supply terminal for analog circuit
75	AVREF0	I		A/D converter reference voltage
76	SL	I		SD level input from tuner
77	TEMP	I		Temperature detector
78	DINC	I		Disc insert sense input
79	EJTD	I		Disc eject position sense input
80	DSENS	I		Grille detach sense

*PD4572A

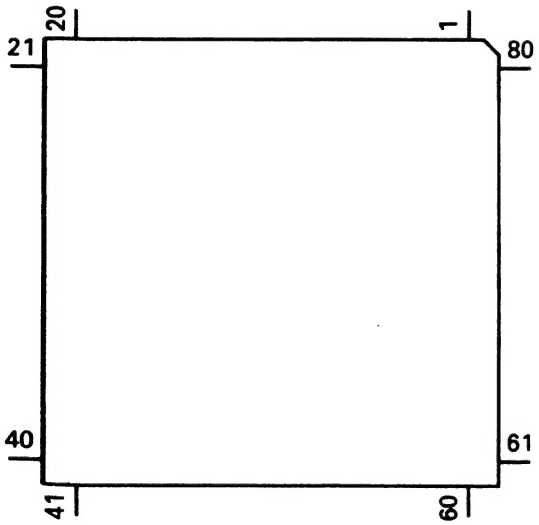

I/O Format	Meaning
C	CMOS
N	N channel open drain

PA2023A

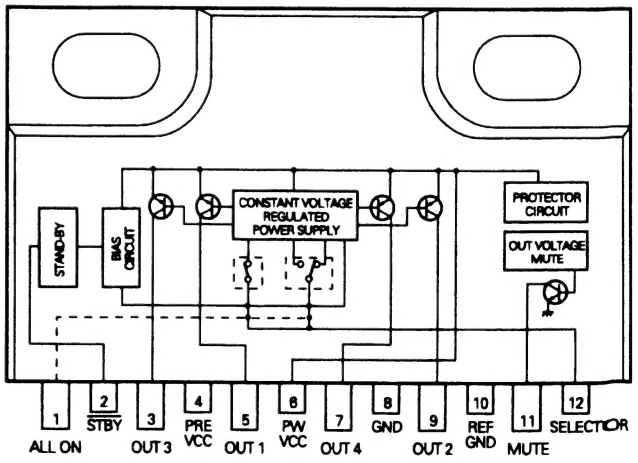

● Pin Functions (PDX002A)

Pin No.	Pin Name	I/O	Function and Operation
1	VSS		GND
2	X1		Crystal oscillator connection pin
3	X0		Crystal oscillator connection pin
4	RESET	I	Reset Input
5,6	MOD1,0	I	Model select input
7	DILMX	O	Function LED select output
8	KYDT	O	Key data output
9	DPDT	I	Display data input
10	REMIN	I	Remote control pulse input
11	SILMO	O	Illumination color select output
12	SILMG	O	Function LED select output
13–16	$\overline{KD4}$-$\overline{KD1}$	I	Key sense input
17–22	$\overline{KDT6}$-$\overline{1}$	O	Key strobe output
23	VDD		5V
24–34	NC		Not used
35–73	SEG38–0	O	LCD segment output
74–77	COM3–0	O	LCD common output
78–80	VLCD–V1		Power supply terminal

*PDX002A

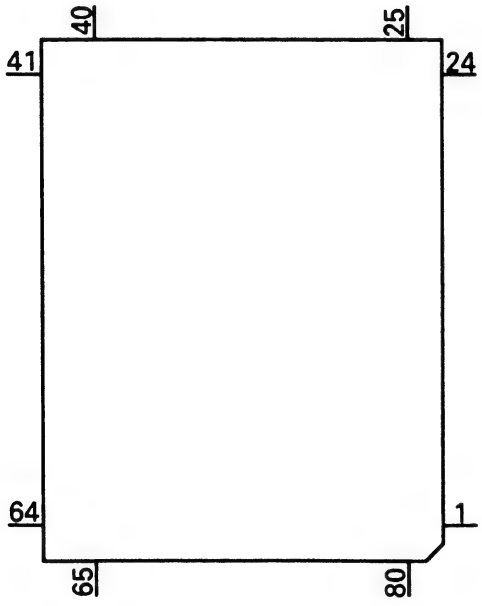

*RPM-678CBR

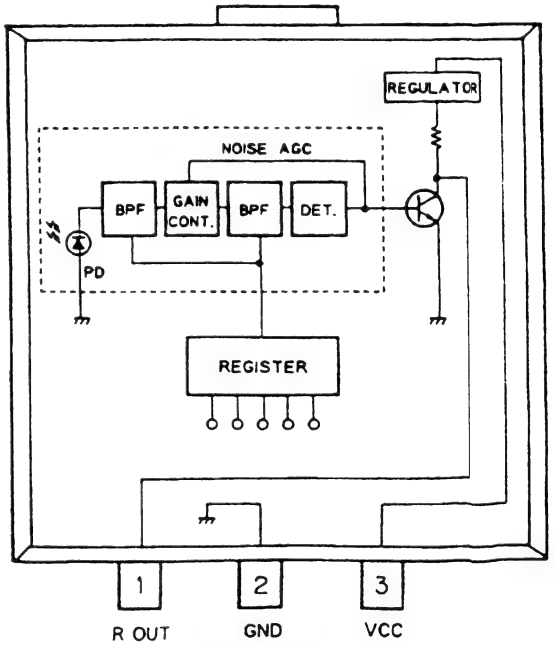

● Pin Functions(UPC2571GS)

Pin No.	Pin Name	I/O	Function and Operation
1	VCC		VCC
2	BP-	I	TE zero cross amplifier input
3	BPO	O	TE zero cross amplifier output
4	WC+		Not used
5	WC-		Not used
6	GND1		GND
7	QDH		Not used
8	QDO		Not used
9	A	I	A signal input
10	C	I	C signal input
11	B	I	B signal input
12	D	I	D signal input
13	E	I	E signal input
14	F	I	F signal input
15	PIN	I	APC amplifier input
16	LA	O	APC amplifier output
17	LAON		APC amplifier ON/OFF switching
18	REFI	I	Reference voltage input
19	REFO	O	Reference voltage output
20	GND2		GND
21	RF+	I	RF amplifier non-inverting input
22	RF-	I	RF amplifier inverting input
23	RFO	O	RF amplifier output
24	RFI		Not used
25	ENVB		Not used
26	ENBP		Not used
27	NC		Non connection
28	TE1O	O	Tracking error amplifier 1 output
29	TE2+	I	Tracking error amplifier 2 non-inverting input
30	TE2-	I	Tracking error amplifier 2 inverting input
31	TE2O	O	Tracking error amplifier 2 output
32	FE1+	I	Focus error amplifier 1 non-inverting input
33	FE1O	O	Focus error amplifier 1 output
34	FE2+	I	Focus error amplifier 2 non-inverting input
35	FE2-	I	Focus error amplifier 2 inverter input
36	FE2O	O	Focus error amplifier 2 output

UPC2571GS

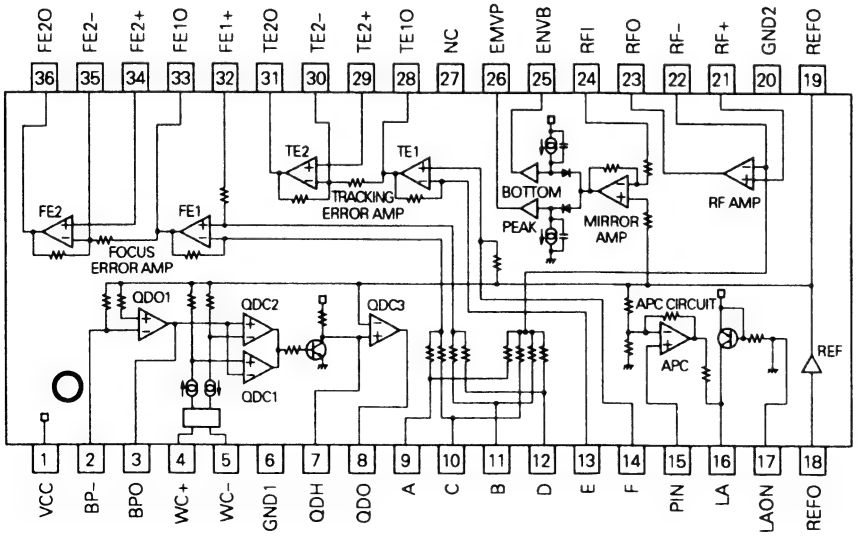

● **Pin Functions(UPD63700GF1)**

Pin No.	Pin Name	I/O	Function and Operation
1	D.GND		Logic circuit GND
2	RFOK	O	RFOK detection signal output terminal
3	MIRR	O	MIRR detection signal output terminal
4	TBC	I	Tracking filter bank switching terminal
5	HOLD	I	Hold control signal input terminal
6	D.VDD		VDD for logic circuit
7	$\overline{RST}$	I	System reset
8	AO	I	Control signal distinguishing data from microcomputer
9	$\overline{STB}$	I	Signal latching serial data inside LSI
10	$\overline{SCK}$	I	Clock input terminal for serial data input and output
11	SO	O	Serial data and status signal output
12	SI	I	Serial data input
13	TM2	I	Double speed playback control terminal
14	D.GND		Logic circuit GND
15	TEST	I	Test terminal
16	STBY	I	Stand-by input terminal
17	CTLV	I	Control terminal for clock generation VCO used by digital PLL in double speed playback mode
18	POUT	O	Output terminal for phase comparison between EFM signal and bit clock
19	D.GND		Logic circuit GND
20	VCO	I	Inverter input
21	$\overline{VCO}$	O	Inverter output
22	D.VDD		VDD for logic circuit
23	PLCK	O	Bit clock monitor terminal
24	LOCK	O	"H" when synchronization signal and frame counter output coincide at EFM demodulator
25	WFCK	O	Signal issuing one-frame period by bit clock dividing signal
26	RFCK	O	Oscillation clock divider signal,output pin for signal giving 1-frame sync.
27	C4M	O	Output terminal for signal having four the frequency of LRCK
28	C16M	O	Oscillation clock output terminal
29	D.GND		Logic circuit GND
30	XTAL	I	Oscillation continuation terminal
31	$\overline{XTAL}$	O	Oscillation continuation terminal
32	D.VDD		VDD for logic circuit
33	SCKO	O	Clock output terminal for audio serial data
34	LRCK	O	Signal distinguishing between left and right channel DOUT terminal output
35	DOUT	O	Serial audio data output terminal
36	TX	O	Digital audio interface data output terminal
37	FLAG	O	Flag signal indicating that the current audio data output of incorrectable data
38	EMPH	O	Emphasis information output
39	WDCK	O	Output terminal for signal having double the frequency of LRCK
40	C2D3	O	Output terminal indicating C2 error correction status
41	SFSY	O	Signal indicating subcode one-frame synchronization
42	SBSY	O	Signal indicating head of subcode block
43	SBSO	O	Subcode data output terminal
44	SBCK	I	Subcode data read clock input terminal
45	D.GND		Logic circuit GND
46,47	C1D1,C1D2	O	Output terminal indicating C1 error correction status
48,49	C2D1,C2D2	O	Output terminal indicating C2 error correction status
50	T4	I	Selects between focus and tracking modulation mode
51	T5	I	Selects motor PWM output mode
52	T6	I	Sets focus PWM output mode
53	T7	I	Sets tracking PWM output mode
54	D.VDD		VDD for logic circuit
55	MRD	O	PWM negative output terminal for the spindle loop filter
56	MFD	O	PWM positive output terminal for the spindle loop filter
57	SRD	O	PWM negative output terminal for the thread loop filter
58	SFD	O	PWM positive output terminal for the thread loop filter

Pin No.	Pin Name	I/O	Function and Operation
59	D.GND		Logic circuit GND
60	TRD	O	PWM negative output terminal for the tracking loop filter
61	TFD	O	PWM positive output terminal for the tracking loop filter
62	FRD	O	PWM negative output terminal for the focus loop filter
63	FFD	O	PWM positive output terminal for the focus loop filter
64	D.VDD		VDD for logic circuit
65	OUTSEL	I	Sets PWM output mode for the motor system
66	TEC1	I	Tracking error input terminal
67	TEC0	I	Tracking error input terminal
68	A.VDD		VDD for analog circuit
69,70	VR2,VR1	I	A/D converter input
71	TE	I	Tracking error input terminal
72	FE	I	Focus error input terminal
73	RFB	I	RFB signal input terminal
74	RFP	I	RFP signal input terminal
75	A.GND		Analog circuit GND
76	REFOUT	O	A/D converter midpoint voltage output terminal inside LSI
77	RFI	I	RF signal input terminal for EFM comparator
78	ASI	I	Level comparing input for RF signal comparison
79	EFM	O	EFM signal output terminal
80	A.VDD		VDD for analog circuit

*UPD63700GF1

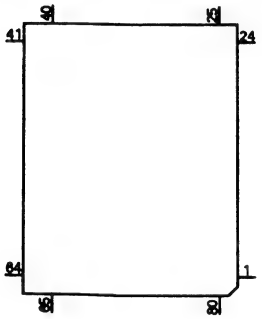

XRA6285FP

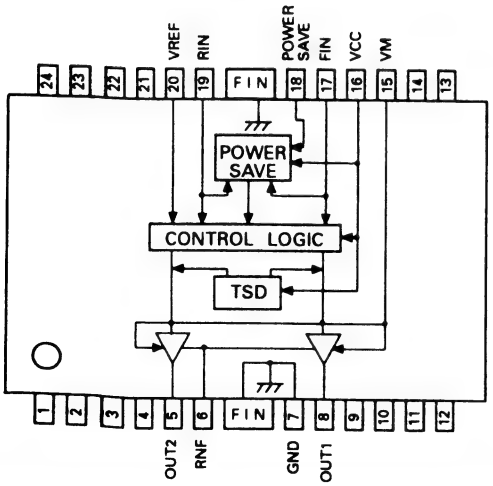

PQ05TZ51

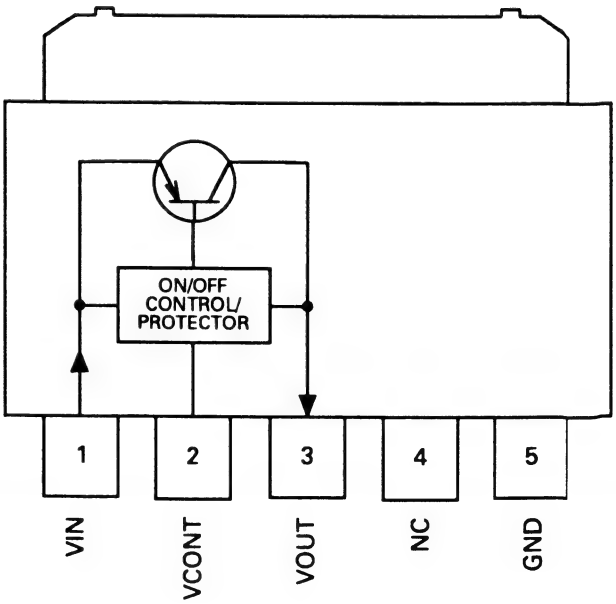

*TC9268F

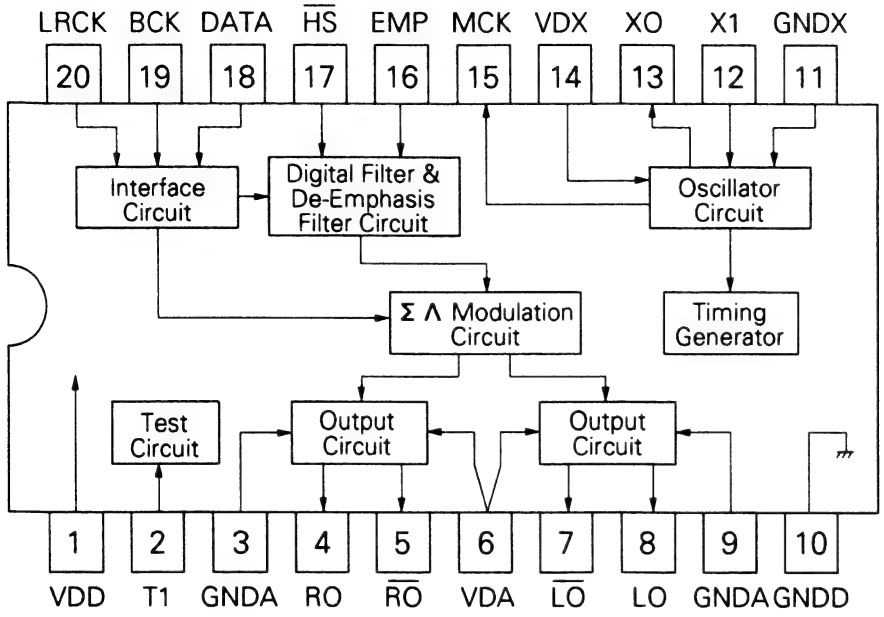

TA2063F

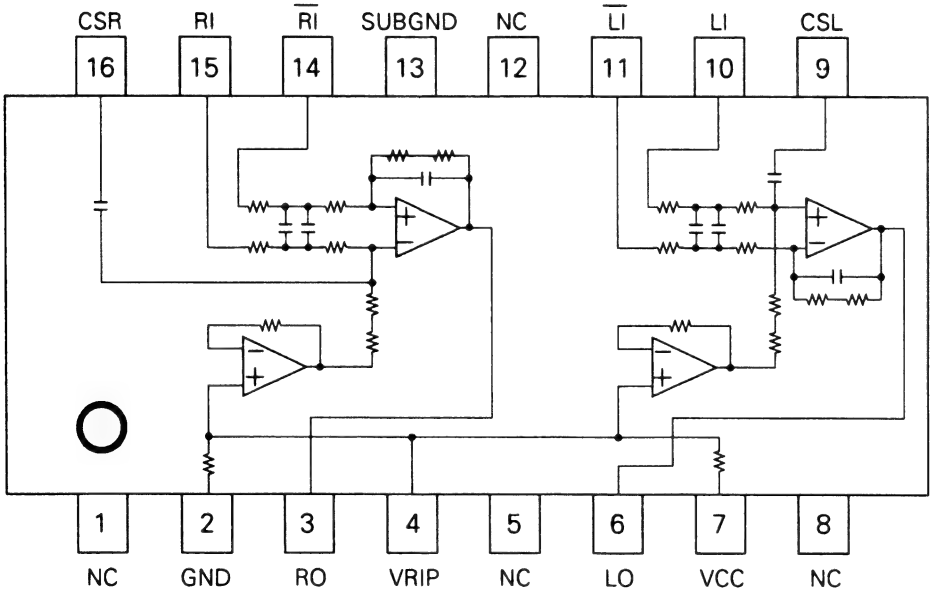

● Waveforms

Note: 1. The encircled numbers denote measuring pointes in the circuit diagram.
2. Reference voltage
REFO: 2.5V

① RFO 0.5V/div. 0.2μs/div.
Normal mode: play

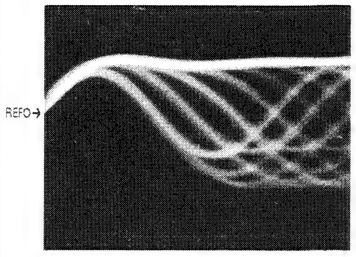

① CH1: RFO 1V/div. 0.5ms/div.
② CH2: MIRR 5V/div.
Test mode: Tracking open

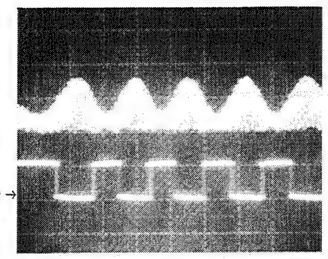

① CH1: RFO 1V/div. 0.5ms/div.
② CH2: MIRR 5V/div.
Normal mode: The defect part passes 800μm.

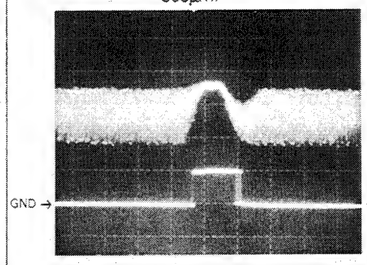

③ CH1: FIN 0.5V/div. 0.2s/div.
④ CH2: FO+ 2V/div.
Test mode: No disc, Focus close

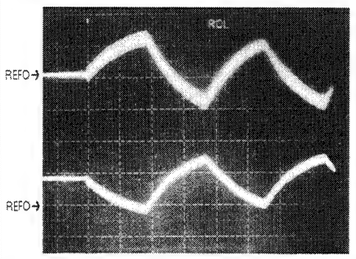

③ CH1: FIN 0.5V/div. 0.2s/div.
⑤ CH2: FOK 2V/div.
Normal mode: Focus close

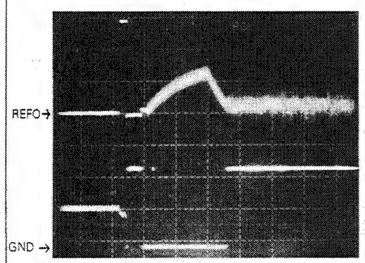

⑥ CH1: FEY 0.5V/div. 1ms/div.
⑦ CH2: XSO 2V/div.
Normal mode: Focus close

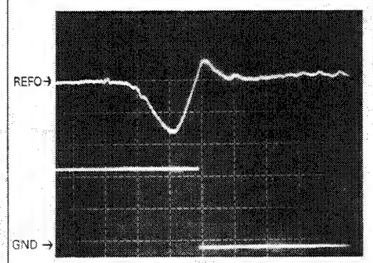

⑧ CH1: TEY 0.5V/div. 0.5ms/div.
⑨ CH2: TIN 0.5V/div.
Test mode: 32 track jump (FWD)

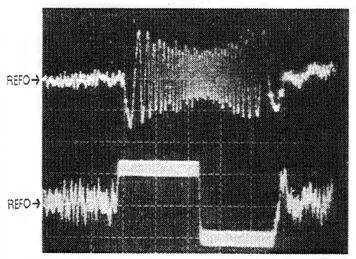

⑧ CH1: TEY 0.5V/div. 0.5ms/div.
⑨ CH2: TIN 0.5V/div.
Test mode: Single jump (FWD)

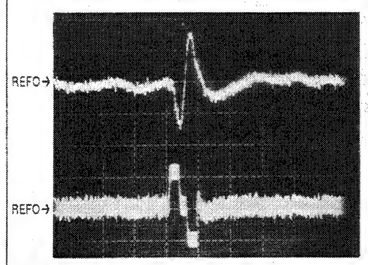

⑧ CH1: TEY 0.5V/div. 5ms/div.
⑨ CH2: TIN 0.5V/div.
Test mode: 100 track jump (FWD)

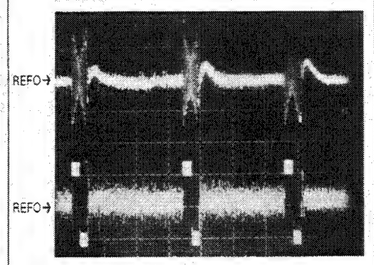

⑥ CH1: FEY 0.2V/div. 20ms/div.
③ CH2: FIN 0.5V/div.
Normal mode: Play

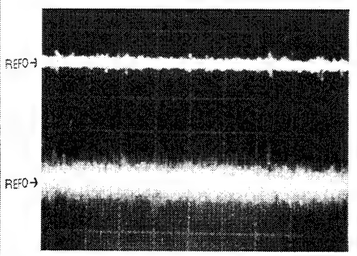

③ CH1: FIN 0.5V/div. 0.5s/div.
⑩ CH2: SIN 1V/div.
Normal mode: Focus close (12cm)

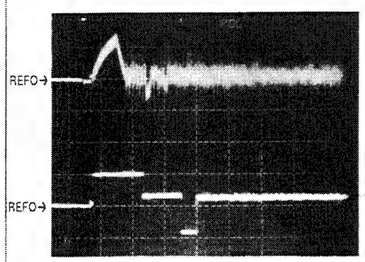

③ CH1: FIN 0.5V/div. 0.5s/div.
⑩ CH2: SIN 1V/div.
Normal mode: Focus close (8cm)

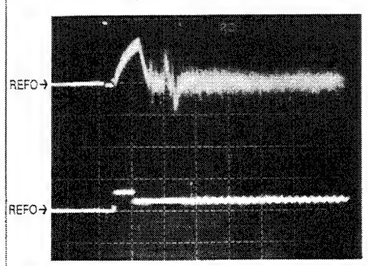

⑧ CH1: TEY 0.5V/div. 20ms/div.
⑨ CH2: TIN 0.5V/div.
Normal mode: Play

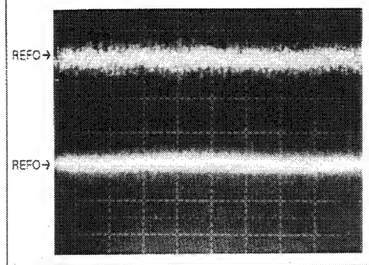

⑧ CH1: TEY 0.5V/div. 5ms/div.
㉓ CH2: CIN 0.5V/div.
Test mode: 100 track jump (FWO)

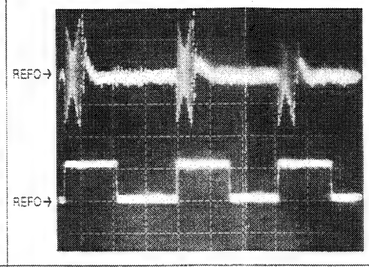

⑩ SIN 0.5V/div. 50ms/div.
Normal mode: 1Play (12cm disc)

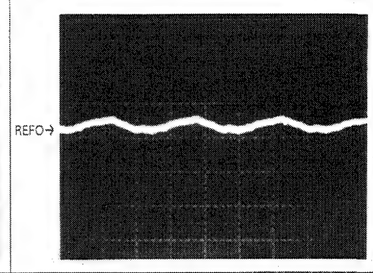

⑩ SIN 0.5V/div. 10ms/div.
Search (12cm disc)

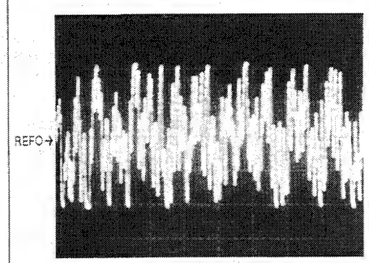

⑪ EFM 2V/div. 5μs/div.
Play

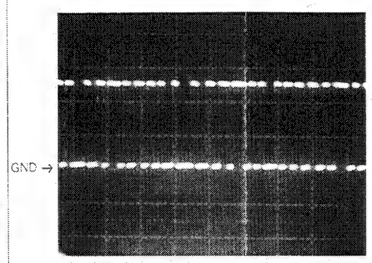

⑧ CH1: TEY 1V/div. 2ms/div.
⑫ CH2: TEC 1V/div.
Test mode: Focus closed
Tracking open

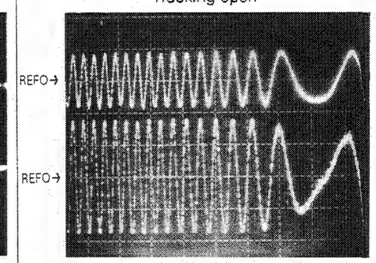

⑧ CH1: TEY 0.5V/div. 0.1s/div.
⑥ CH2: FEY 0.5V/div.
Normal mode: AGC after focus close

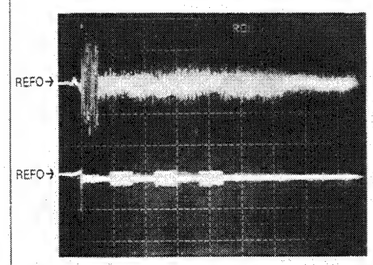

⑮ PLCK 2V/div. 0.5μs/div.
Play

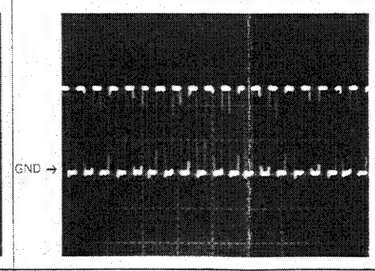

⑯ SCKO 2V/div. 1μs/div.
Play

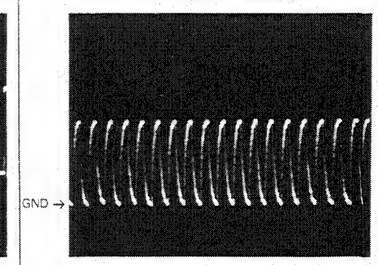

⑰ Dout 2V/div. 10μs/div.
Play

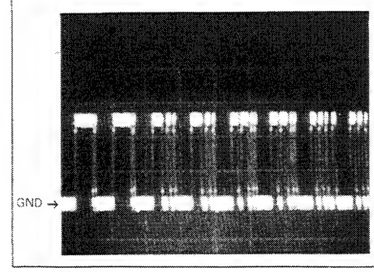

⑱ LRCK 2V/div. 20μs/div.
Play

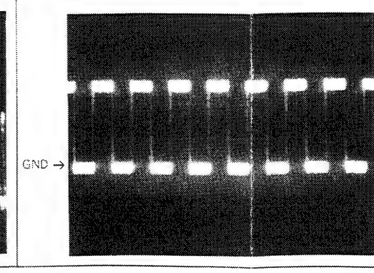

⑲ VD 5V/div. 50ms/div.
Normal mode: No disc

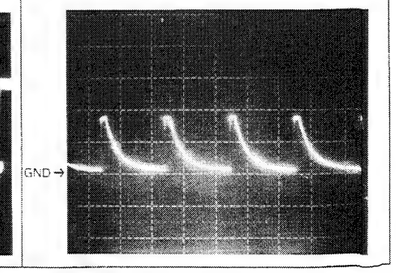

diagram.

0.5ms/div.
t part passes

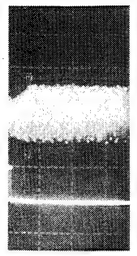

1ms/div.
se

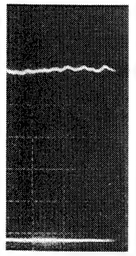

5ms/div.
ap (FWD)

0.5s/div.
se (8cm)

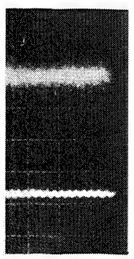

17

⑧ CH1: TEY 0.5V/div. 20ms/div.
⑨ CH2: TIN 0.5V/div.
Normal mode: Play

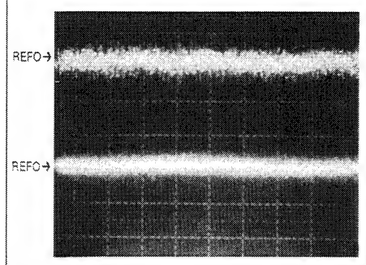

⑧ CH1: TEY 0.5V/div. 5ms/div.
㉓ CH2: CIN 0.5V/div.
Test mode: 100 track jump (FWO)

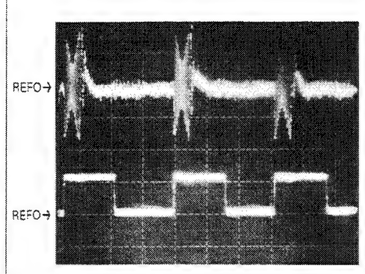

⑩ SIN 0.5V/div. 50ms/div.
Normal mode: 1Play (12cm disc)

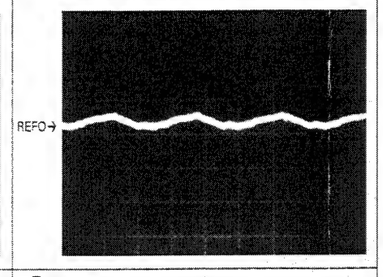

⑩ SIN 0.5V/div. 10ms/div.
Search (12cm disc)

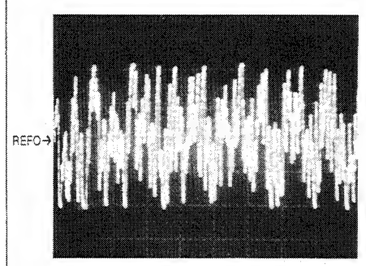

⑪ EFM 2V/div. 5µs/div.
Play

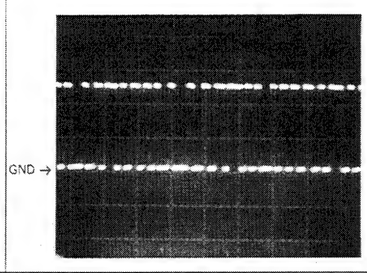

⑧ CH1: TEY 1V/div. 2ms/div.
⑫ CH2: TEC 1V/div.
Test mode: Focus closed
Tracking open

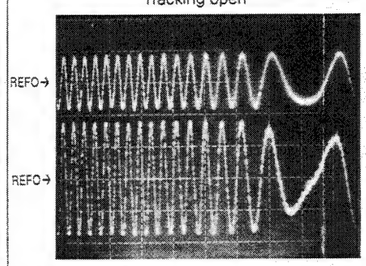

⑧ CH1: TEY 0.5V/div. 0.1s/div.
⑥ CH2: FEY 0.5V/div.
Normal mode: AGC after focus close

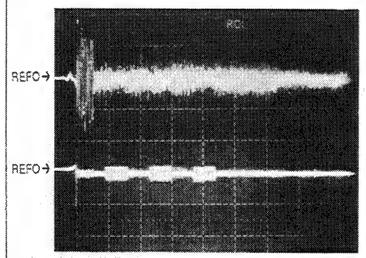

⑮ PLCK 2V/div. 0.5µs/div.
Play

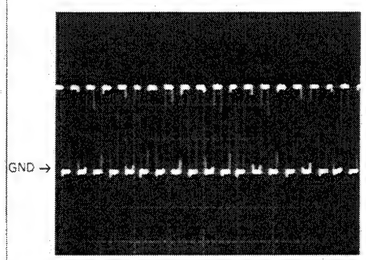

⑯ SCKO 2V/div. 1µs/div.
Play

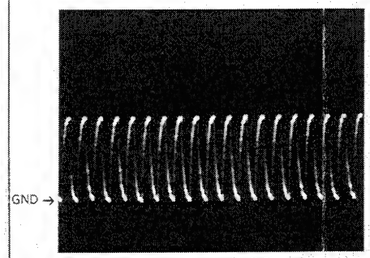

⑰ Dout 2V/div. 10µs/div.
Play

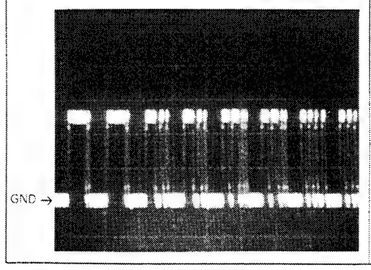

⑱ LRCK 2V/div. 20µs/div.
Play

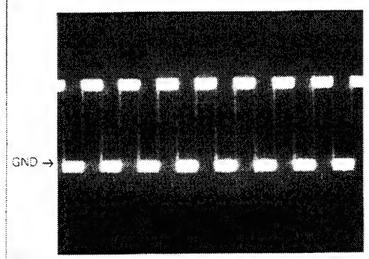

⑲ VD 5V/div. 50ms/div.
Normal mode: No disc

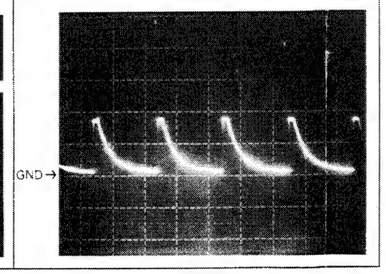

18

㉒ CH1: R OUT 1V/div. 0.2ms/div.
㉑ CH2: L OUT 1V/div.
Normal mode: Play (1kHz 0dB)

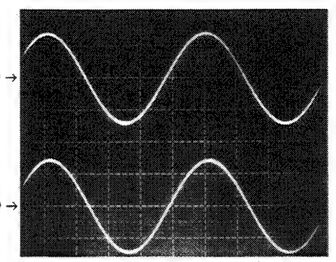

⑥ CH1: FEY 1V/div. 1ms/div.
③ CH2: FIN 1V/div.
Normal mode: During AGC

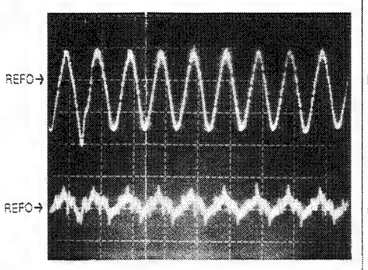

⑧ CH1: TEY 0.2V/div. 1ms/div.
⑨ CH2: TIN 0.5V/div.
Normal mode: During AGC

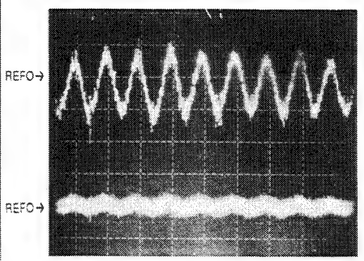

19

2. CIRCUIT DIAGRAM AND PATTERN

2.1 CD MECHANISM MODULE

● **Connection Diagram**

PU UNIT

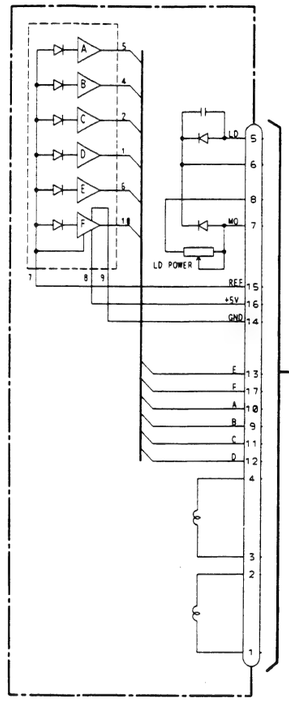

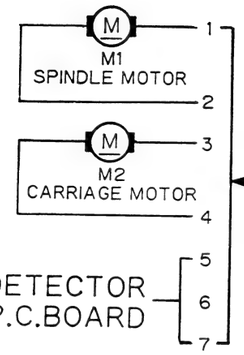

DETECTOR P.C.BOARD

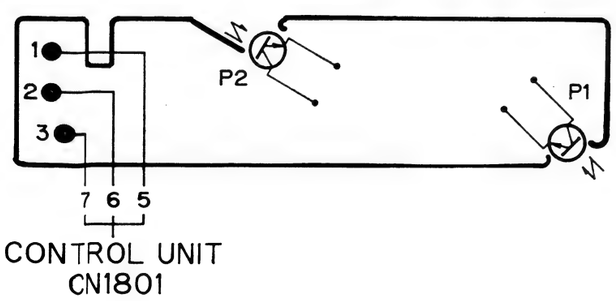

CONTROL UNIT

IC. Q IC1302 IC1301 IC1303 IC1601 IC1602 Q1601 Q1602 Q1603 IC1201 IC1701 Q1001

ADJ

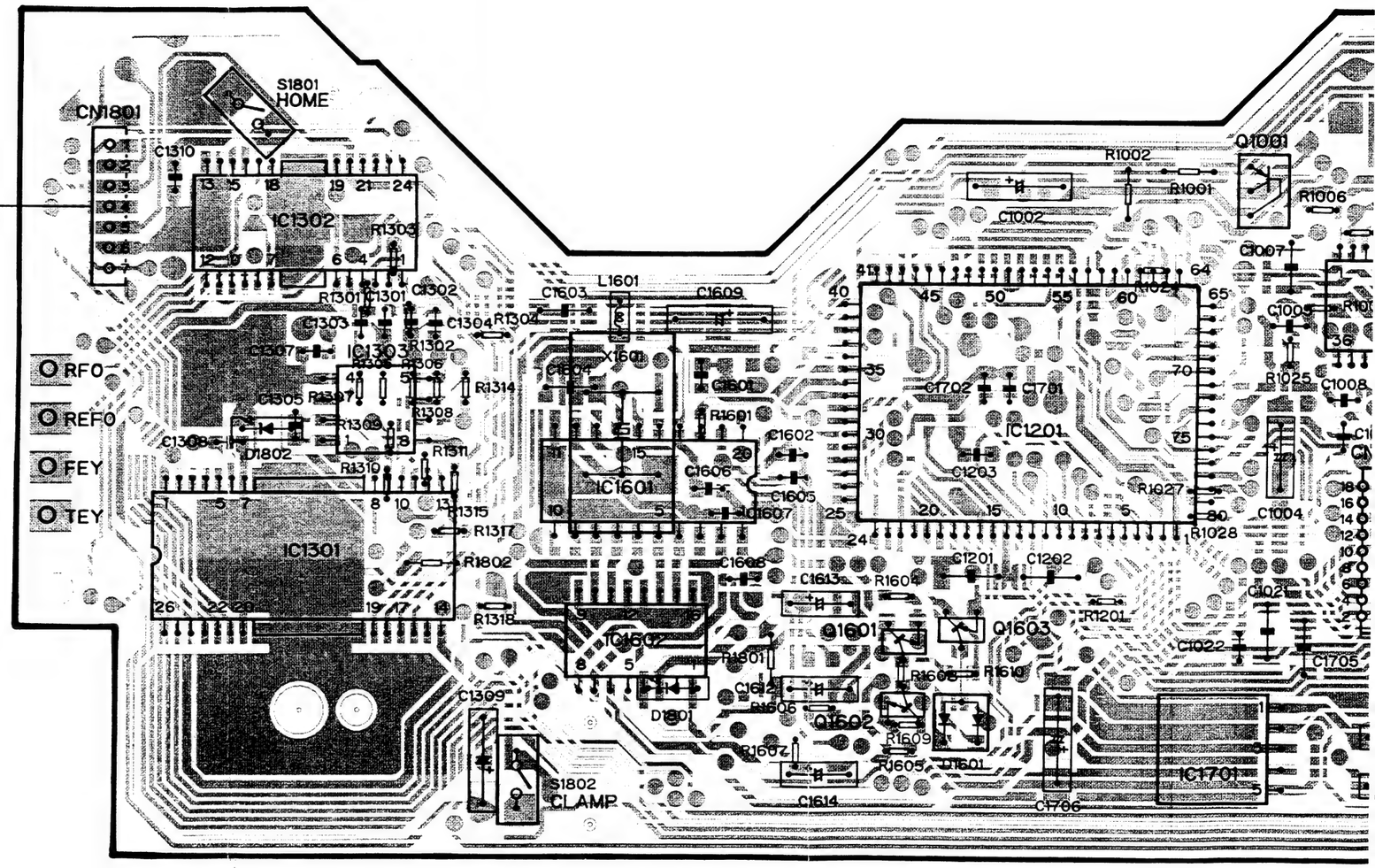

TROL UNIT

IC1302
IC1301 IC1303

IC1601
IC1602

Q1601
Q1602 Q1603 IC1201

IC1701 Q1001

IC1001

VR1003 VR1002
VR1001 VR1004

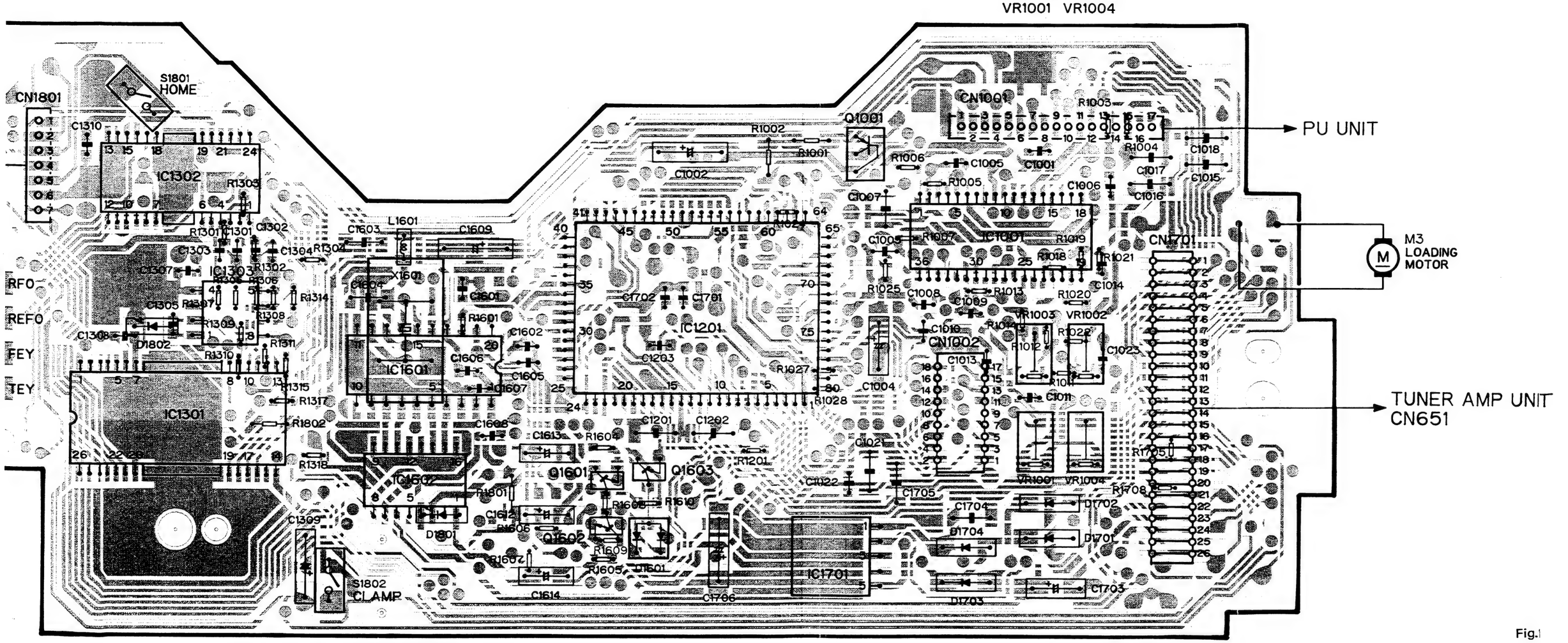

Fig.1

● Circuit Diagram

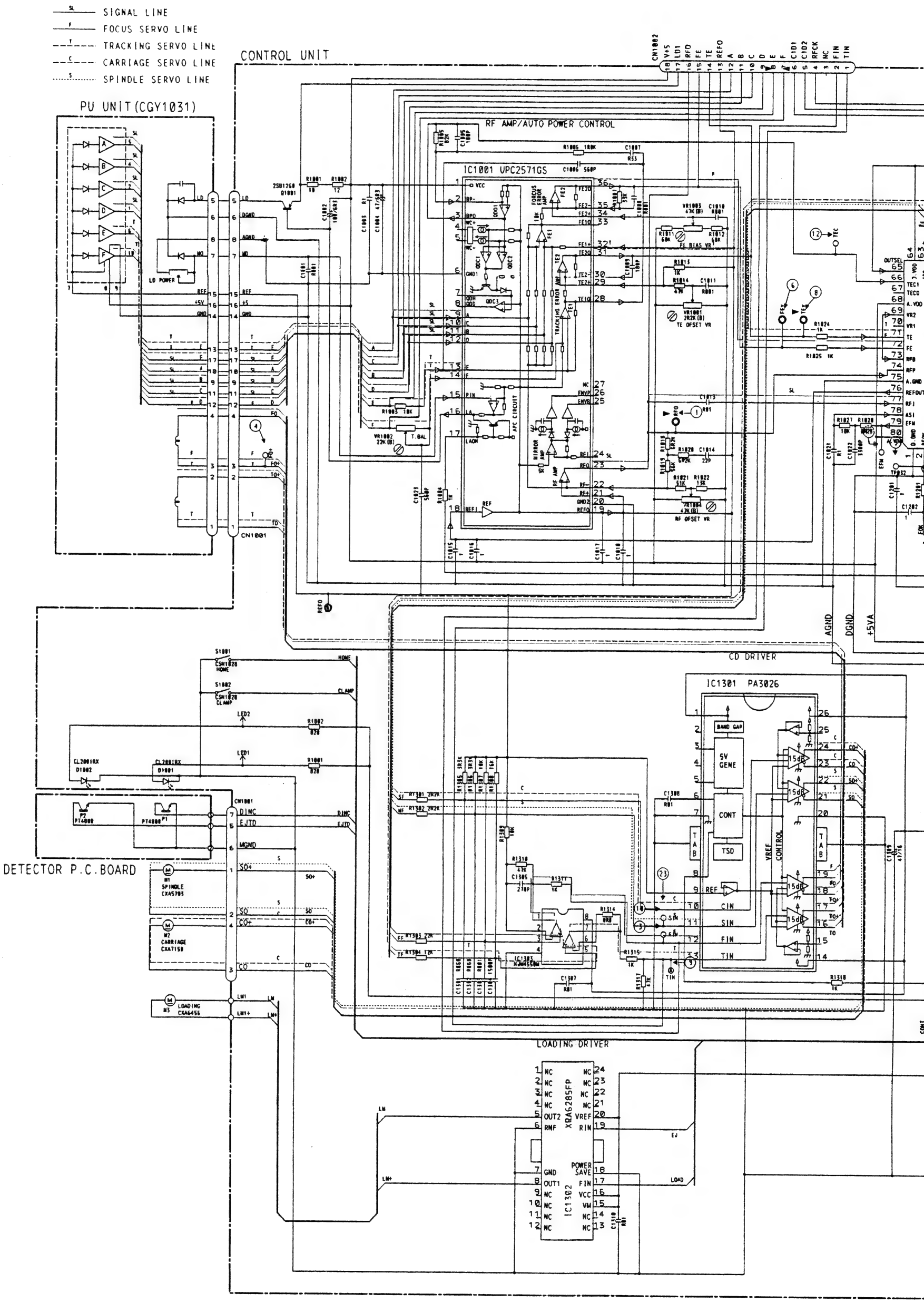

NOTE.

Symbol indicates a resistor.
No differentiation is made between chip resistors and discrete resistors.

Symbol indicates a capacitor.
No differentiation is made between chip capacitors and discrete capacitors.

Decimal points for resistor and capacitor fixed values are expressed as:
2.2→2R2
0.022→R022

IC1201
UPD63700GF1
FOCUS/TRACKING
CARRIAGE/SPINDLE
DIGITAL SERVO
DIGITAL SIGNAL
PROCESSOR

D/A
CONVERTER

IC1601 TC9268F

LOW-PASS
FILTER

IC1682 TA2063F

CD DRIVER

IC1301 PA3026

REGULATOR

C1701 PQ05TZ51

SWITCHES:
CONTROL UNIT
S1801 HOME SWITCH ..... ON-OFF
S1802 CLAMP SWITCH ..... ON-OFF
The underlined indicates the switch position.

Fig.2

NOTE:

Symbol indicates a resistor.
No differentiation is made between chip resistors and discrete resistors.

Symbol indicates a capacitor.
No differentiation is made between chip capacitors and discrete capacitors.

Decimal points for resistor and capacitor fixed values are expressed as:
2.2→2R2
0.022→R022

IC1201
UPD63700GF1
FOCUS/TRACKING
CARRIAGE/SPINDLE
DIGITAL SERVO
DIGITAL SIGNAL
PROCESSOR

D/A
CONVERTER

IC1601 TC9268F

LOW-PASS
FILTER

IC1602 TA2063F

REGULATOR

C1701 PQ05TZ51

TUNER AMP UNIT
CN651

SWITCHES:
CONTROL UNIT
S1801 HOME SWITCH ..... ON-OFF
S1802 CLAMP SWITCH ..... ON-OFF
The underlined indicates the switch position.

Fig.2

2.2 TUNER AMP UNIT

● **Circuit Diagram**

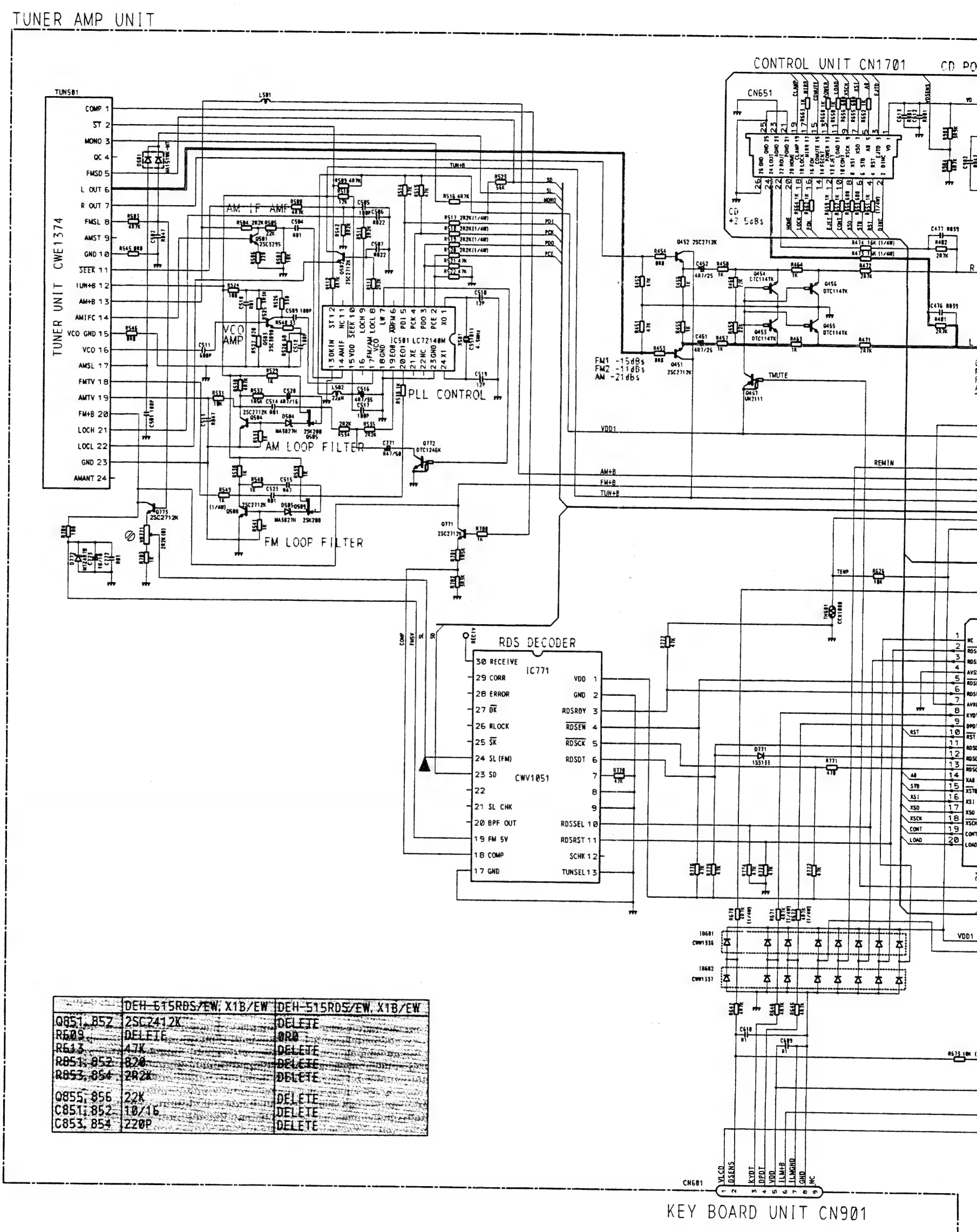

	DEH-615RDS/EW, X1B/EW	DEH-515RDS/EW, X1B/EW
Q851, 852	2SC2412K	DELETE
R609	DELETE	0R0
R613	47K	DELETE
R851, 852	820	DELETE
R853, 854	2R2K	DELETE
Q855, 856	22K	DELETE
C851, 852	10/16	DELETE
C853, 854	220P	DELETE

CONTROL UNIT CN1701

CD POWER SUPPLY

CN651

CD +2.5dBs

ELECTRONIC VOLUME

BUFFER AMP

CD/TUNER MIXING AMP

IC481 LC7538JMHS

IC471 NJM4558L

IC482 NJM4558MD

IC483 NJM4558MD

FM1 -15dBs
FM2 -11dBs
AM -21dBs

CD +2.5dBs
FM1 -15dBs
FM2 -11dBs
AM -21dBs

CD +6dBs
FM +4dBs
AM -6dBs

CD +11.5dBs
FM +9.5dBs
AM -0.5dBs

TMUTE

Q457 UN2111

VDD1

REMIN

AM+B

FM+B

TUN+B

SYS+B

L682 47uH

L681 47uH

RDS DECODER

IC771 CWV1051

VDD 1
GND 2
RDSRDY 3
RDSEN 4
RDSCK 5
RDSDT 6
RDSSEL 10
RDSRST 11
SCHK 12
TUNSEL 13

IC601
PD4572A
SYSTEM CONTROL

RESET
MUTE
MONO
PCL
VCK
VST
VDT
PEE
SWVDD
VLCDPW
BLGT
SYSPW

BUZZER BZ601 CPV1011

Q601 DTC114EK

PREMUTE
AMPMUTE

Q551 DTC114EK

AMP MUTE

BACK LIGHT CONTROL

Q605 2SA1574
Q606 DTC114EK

LCD DRIVER POWER CONTROL

Q603 2SA1574
Q604 DTC114EK

R573 10K (1/4W)

VDD2

VDD3

Q607 2SA1015

DISPLAY VDD CONTROL

IC961 PAJ001A

A SENSE
B SENSE
RESET
VDD POWER

IC971 PA2023A

TUNER/SYSTEM +
POWER SUPPLY

CN601

KEY BOARD UNIT CN901

NOTE :

Symbol indicates a resistor.
No differentiation is made between chip resistors and discrete resistors.

Symbol indicates a capacitor.
No differentiation is made between chip capacitors and discrete capacitors.

Decimal points for resistor and capacitor fixed values are expressed as:
2.2→2R2
0.022→R022

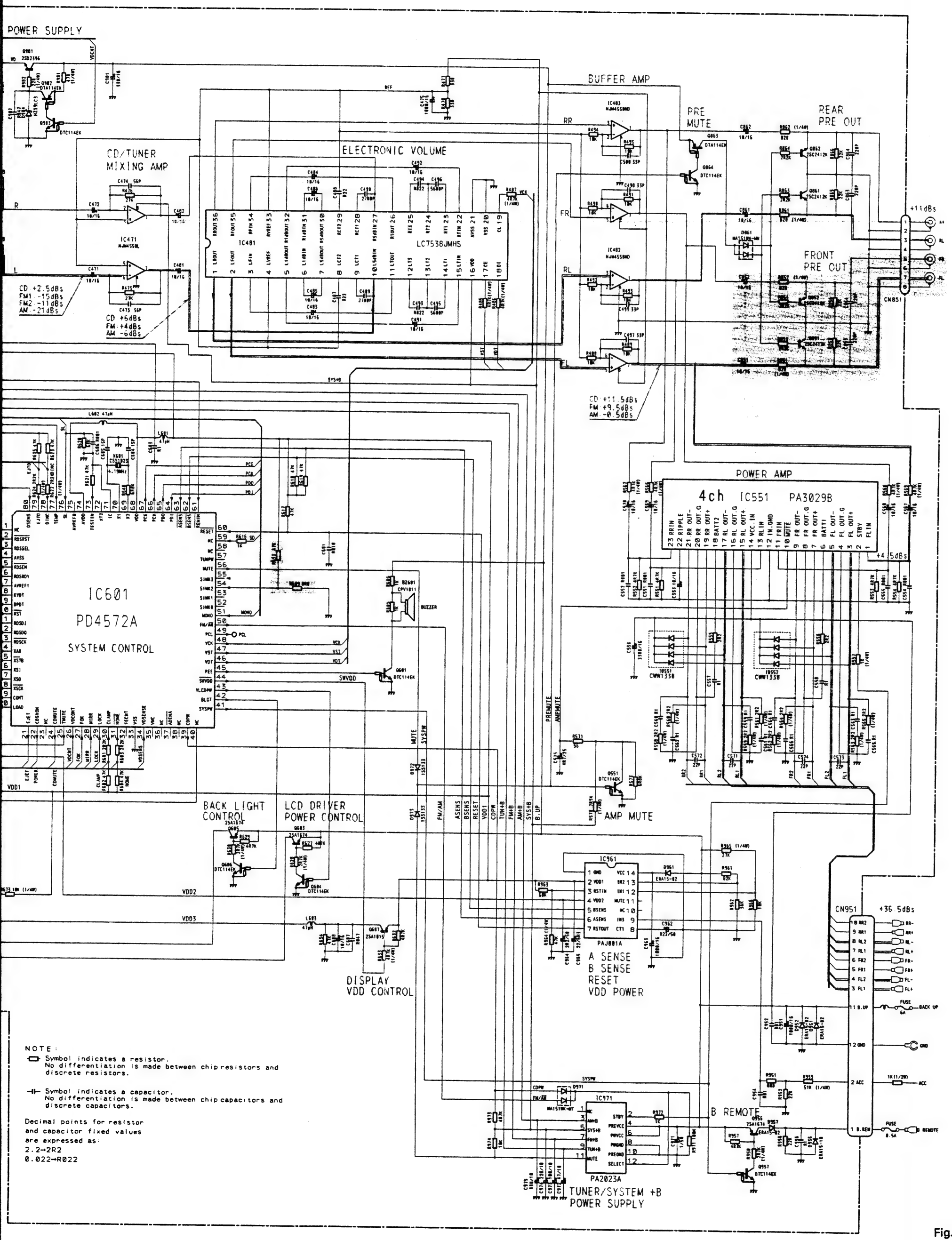
POWER SUPPLY
BUFFER AMP
PRE MUTE
REAR PRE OUT
CD/TUNER MIXING AMP
ELECTRONIC VOLUME
LC7538JMH5
IC471 NJM4558L
IC481
IC482 NJM4558MD
IC483 NJM4558MD
FRONT PRE OUT
CN851
+11dBs
CD +2.5dBs
FM1 -15dBs
FM2 -11dBs
AM -21dBs
CD +6dBs
FM +4dBs
AM -6dBs
CD +11.5dBs
FM +9.5dBs
AM -0.5dBs
POWER AMP
4ch IC551 PA3029B
+4.5dBs
IC601
PD4572A
SYSTEM CONTROL
BUZZER
AMP MUTE
BACK LIGHT CONTROL
LCD DRIVER POWER CONTROL
DISPLAY VDD CONTROL
IC961
PAJ801A
A SENSE
B SENSE
RESET
VDD POWER
IC971
PA2023A
TUNER/SYSTEM +B POWER SUPPLY
B REMOTE
CN951
+36.5dBs
BACK UP
ACC
B REMOTE
GND
NOTE :
Symbol indicates a resistor.
No differentiation is made between chip resistors and discrete resistors.
Symbol indicates a capacitor.
No differentiation is made between chip capacitors and discrete capacitors.
Decimal points for resistor and capacitor fixed values are expressed as:
2.2→2R2
0.022→R022

Fig.3

● Connection Diagram

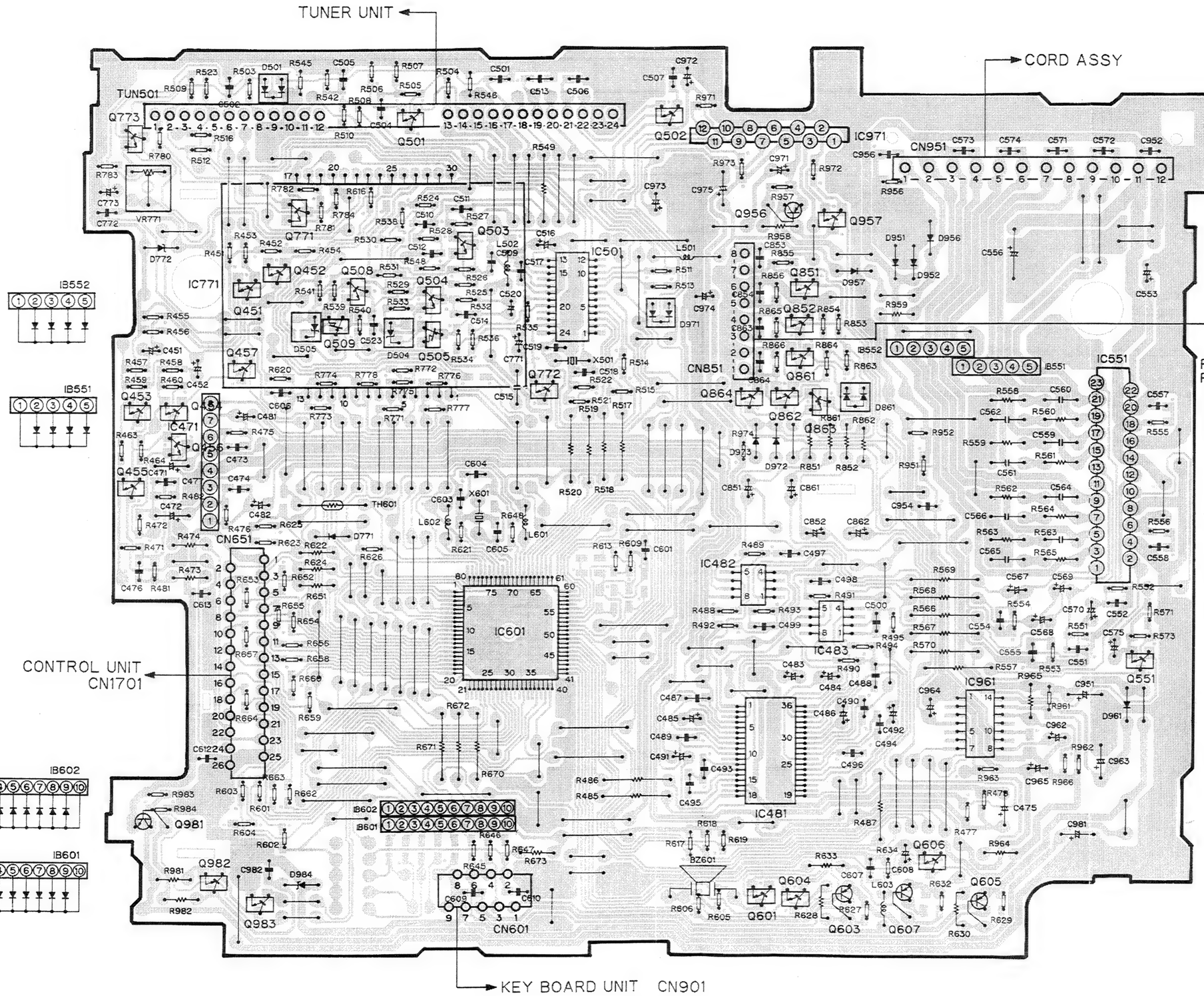

ADJ	IC. Q
	Q501 Q502
	Q773 IC971
VR771	
	Q771 Q956 Q957
	Q503
	Q452 IC501
	IC771 Q451 Q508 Q504 Q851
	Q509 Q505 Q852
	Q861 Q457 Q772
	Q864 Q862 Q863 Q453 Q454
	Q456
	Q455 IC551 IC471
	IC482
	IC601 IC483
	Q551
	IC961
	IC481
	Q981
	Q606 Q982
	Q983 Q601 Q604 Q603 Q607 Q605

Fig.4

2.3 KEY BOARD UNIT

● **Circuit Diagram**

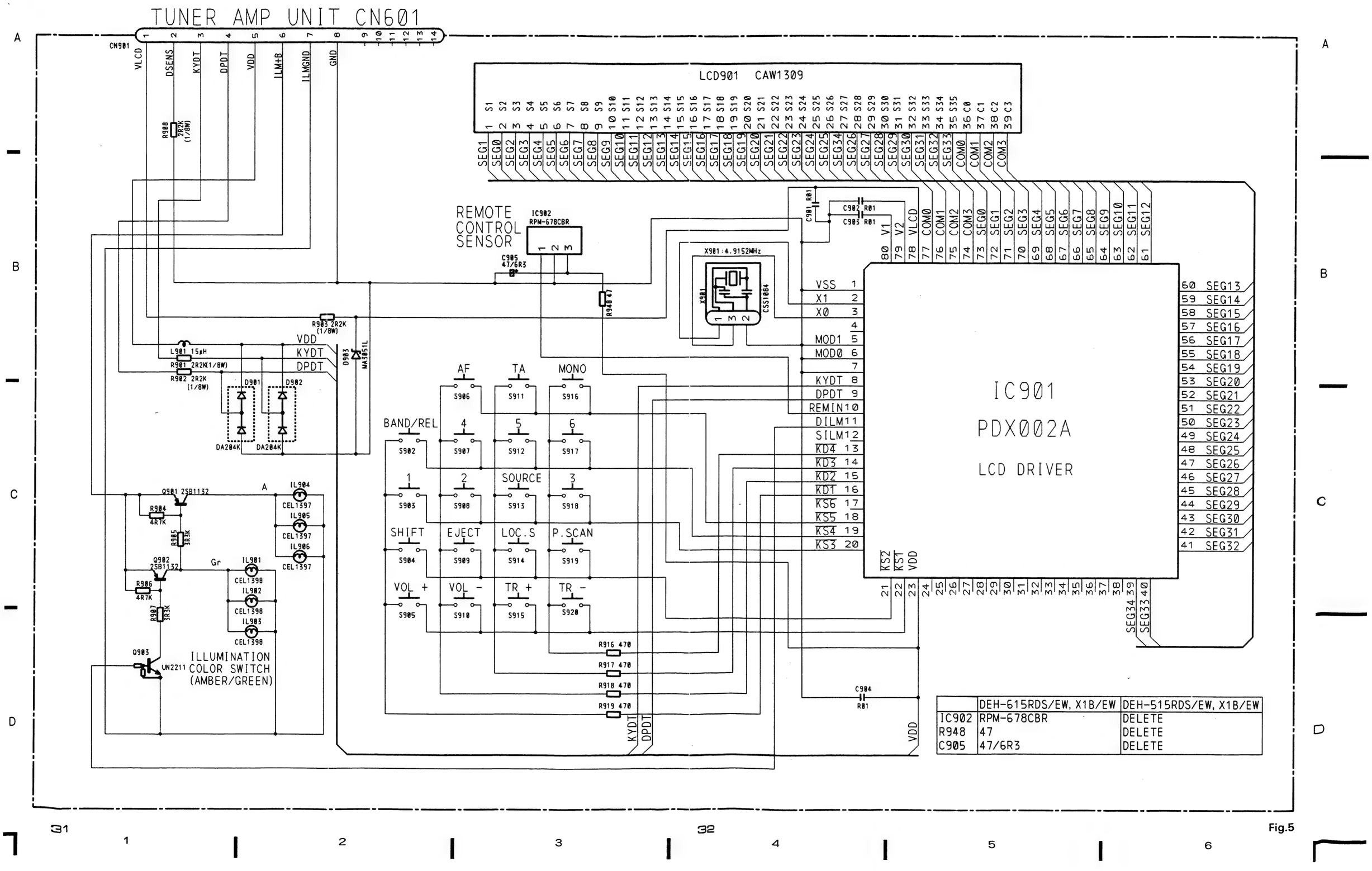

	DEH-615RDS/EW, X1B/EW	DEH-515RDS/EW, X1B/EW
IC902	RPM-678CBR	DELETE
R948	47	DELETE
C905	47/6R3	DELETE

Fig.5

● **Connection Diagram**

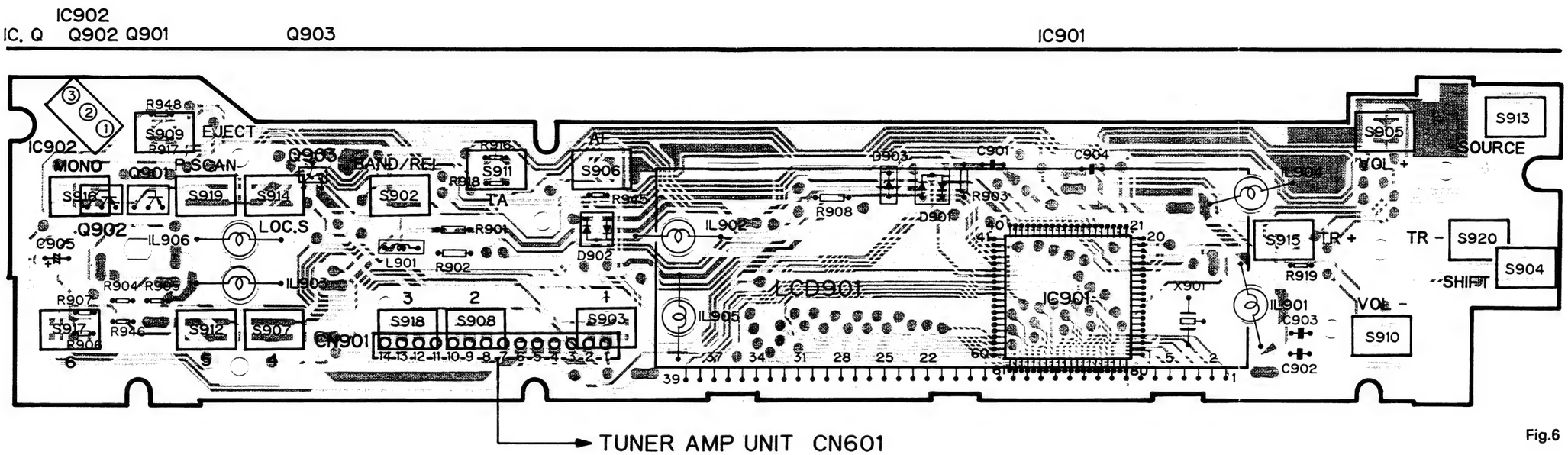

Fig.6

2.4 TUNER UNIT

● Circuit Diagram

TUNER UNIT

NOTE

Symbol indicates a resistor.
No differentiation is made between chip resistors and discrete resistors.

Symbol indicates a capacitor.
No differentiation is made between chip capacitors and discrete capacitors.

Decimal points for resistor and capacitor fixed values are expressed as
2.2→2R2
0.022→R022

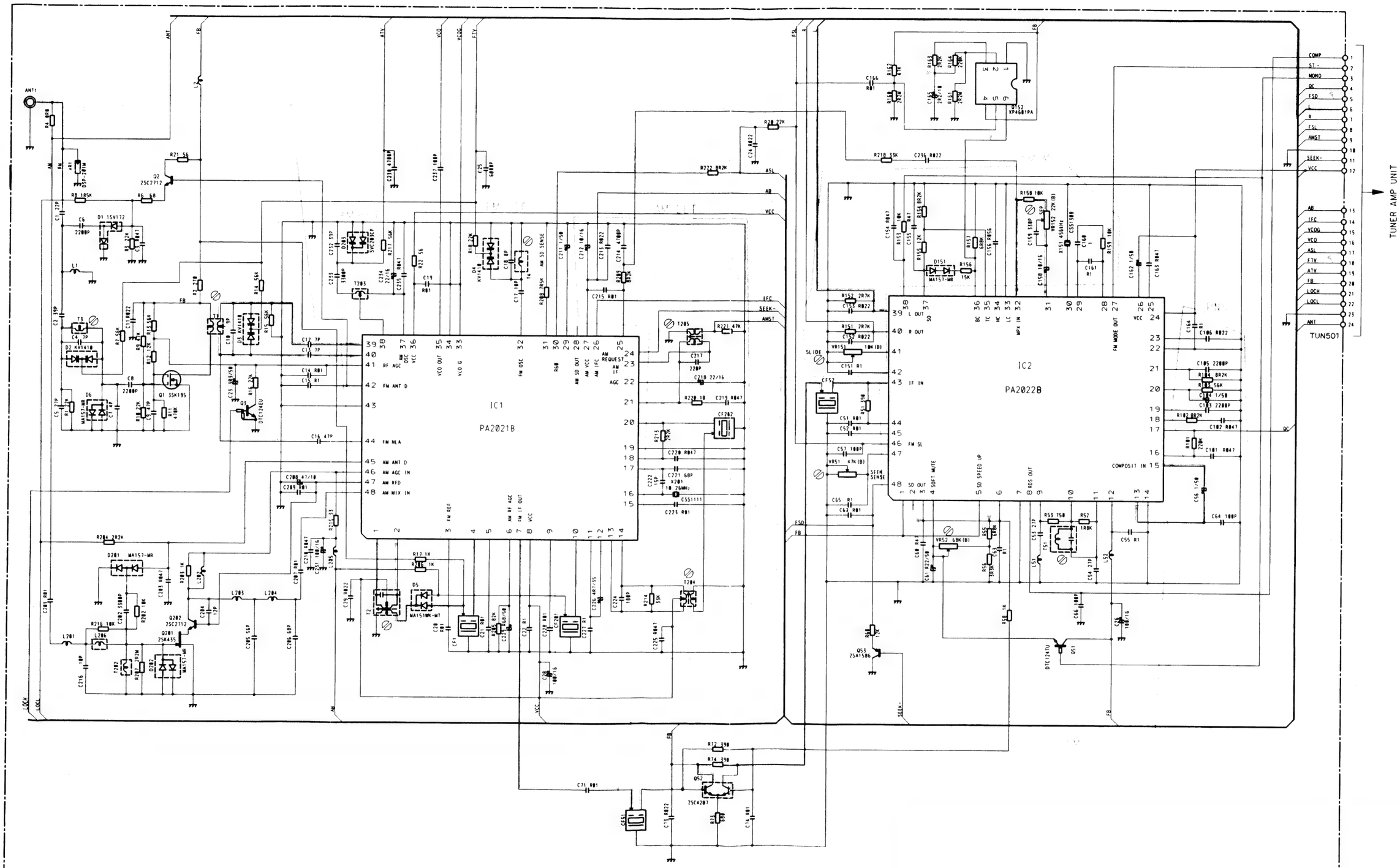

Fig.7

● **Connection Diagram**

IC. Q	Q201	Q3	Q202	Q1			Q2	IC1			Q52		Q152	Q53	Q51	IC2	
ADJ		T3			T1	T2					T4	T204 T205 VR51		VR52		VR151 VR152	T51

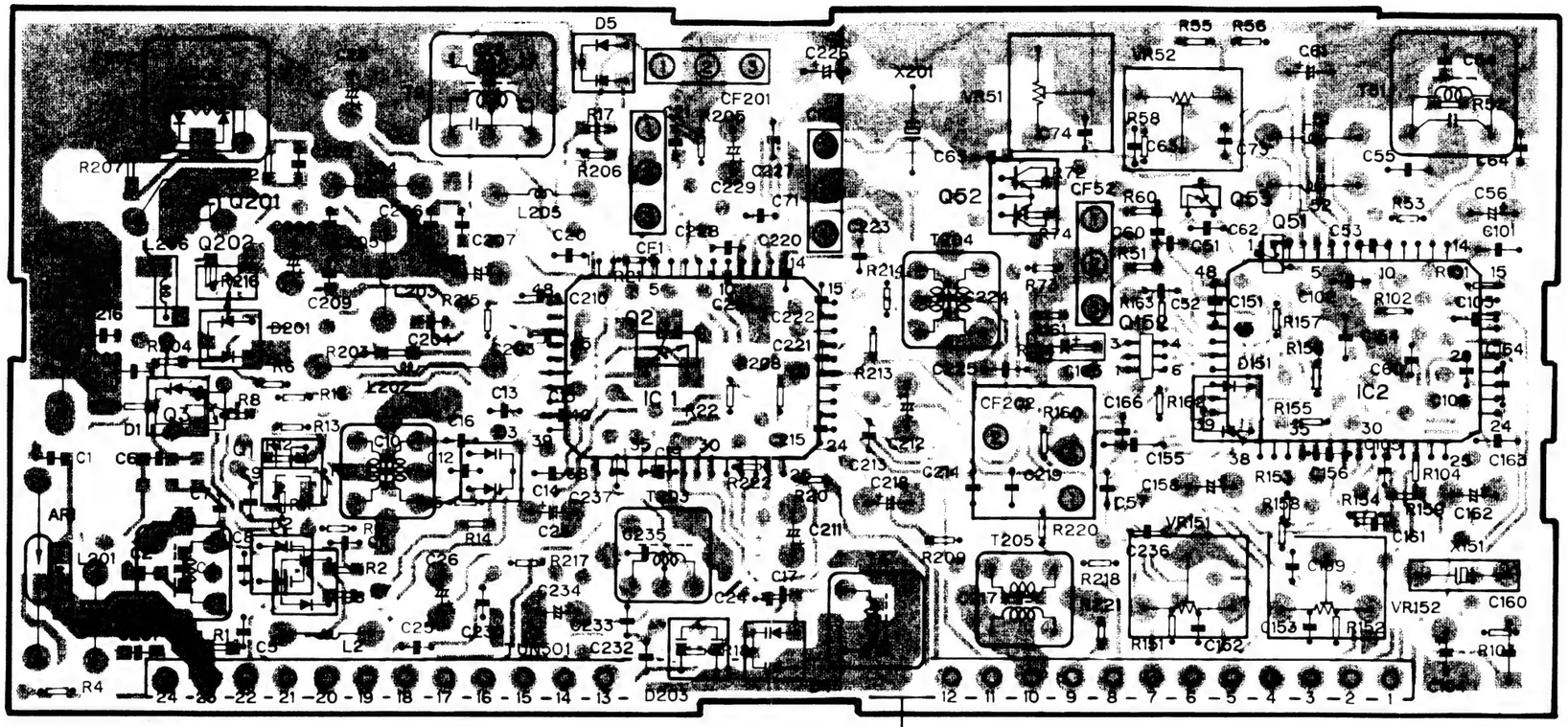

Fig.8

TUNER AMP UNIT

3. CHASSIS EXPLODED VIEW

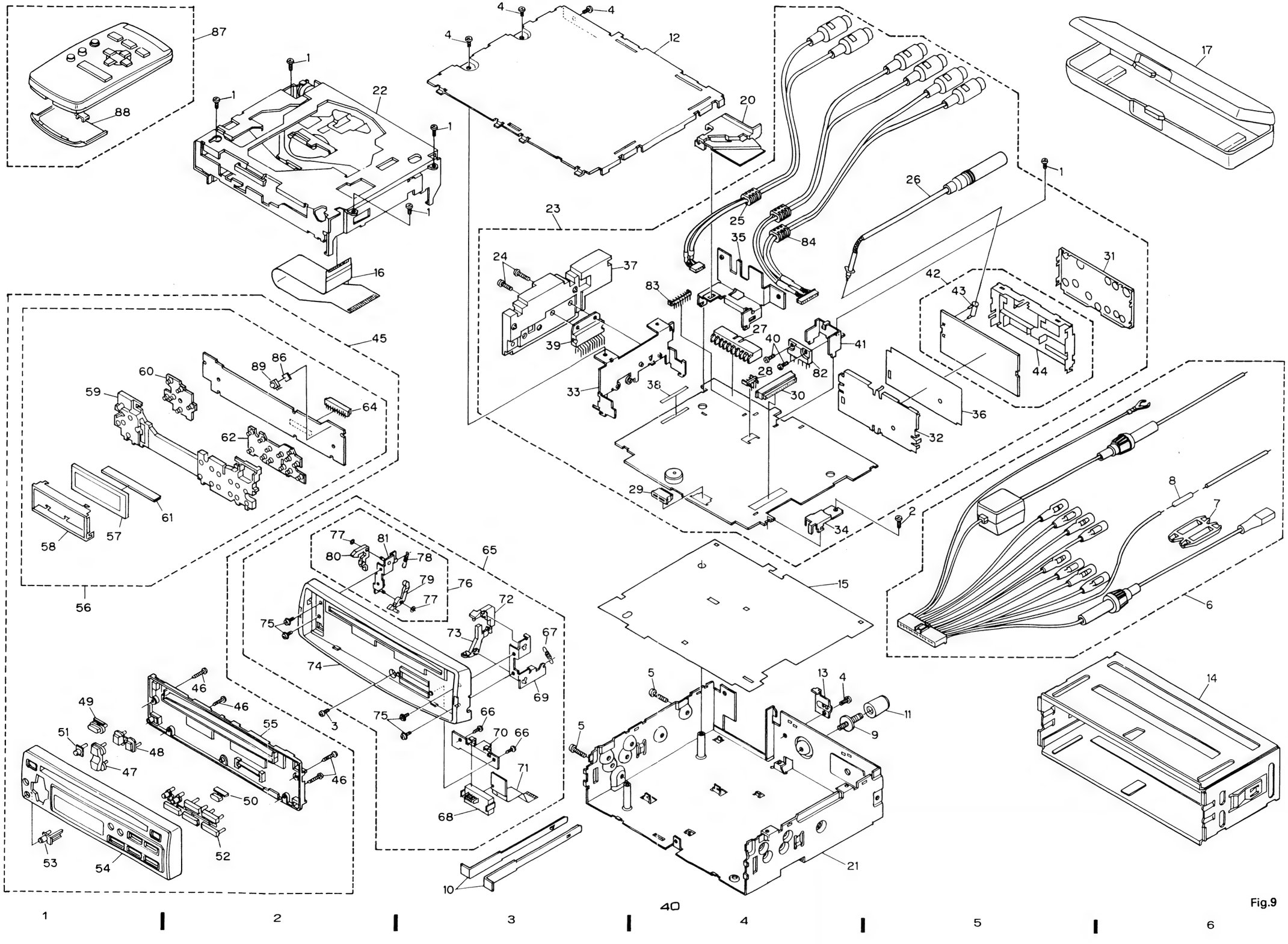

Fig.9

NOTES:

● Parts marked by "✱"are generally unavailable because they are not in our Master Spare Parts List.

● Parts List(DEH-615RDS/EW)

Mark	No.	Description	Part No.
	1	Screw	BSZ26P050FMC
	2	Screw	BSZ26P080FMC
	3	Screw	PSS26P080FZK
	4	Screw	BSZ30P060FMC
	5	Screw	BSZ30P120FMC
	6	Cord Assy	CDE4325
	7	Cap	CNS1472
	8	Resistor	RS1/2P102JL
	9	Screw	CBA1284
	10	Handle	CNC4947
	11	Bush	CNV1009
	12	Case	CNB1817
	13	Holder	CNC3850
	14	Holder	CNC4946
	15	Insulator	CNM3726
	16	P.C.Board	CNP3534
	17	Case	CNS3090
	18	·····	
	19	·····	
	20	Holder	CNV3620
	21	Chassis Unit	CXA6982
	22	CD Mechanism Module	CXK2813
	23	Tuner Amp Unit	CWX1826
	24	Screw	BSZ26P120FMC
	25	·····	
	26	Antenna Cable	CDH1146
	27	Plug(CN951)	CKM1139
	28	·····	
	29	Connector(CN601)	CKS1529
	30	Connector(CN651)	CKS1546
	31	Holder	CNC4881
	32	Holder	CNC4882
	33	Bracket	CNC4940
	34	Holder	CNC5013
	35	Bracket	CNC5016
	36	Insulator	CNM3825
	37	Heat Sink	CNR1307
	38	Spacer	CNM3343
	39	IC(IC551)	PA3029B
	40	Screw	BSZ30P060FMC
	41	Bracket	CNC5014
	42	Tuner Unit	CWE1374
	43	Antenna Jack	CKX1043
	44	Holder	CNC4880
	45	Detach Grille Assy	CXA6943

Mark	No.	Description	Part No.
	46	Screw	BUZ20P100FZK
	47	Button(+-)	CAC4091
	48	Button(<>)	CAC4092
	49	Button(SOURCE)	CAC4094
	50	Button(EJECT)	CAC4095
	51	Button	CAC4096
	52	Button	CAC4097
	53	Button	CAC3744
	54	Grille Unit	CXA6914
	55	Cover	CNS2818
	56	Key Board Unit	CWX1773
	57	LCD	CAW1309
	58	Holder	CNC5009
	59	Lens Unit	CXA7655
	60	Rubber	CNV3989
	61	Connector	CNV3673
	62	Rubber	CNV3988
	63	·····	
	64	Plug(CN901)	CKS2402
	65	Panel Assy	CXA5875
	66	Screw	BPZ20P060FMC
	67	Spring	CBH1659
	68	Socket	CKS2782
	69	Holder	CNC4943
	70	Holder	CNC4944
	71	P.C.Board	CNP3532
	72	Arm	CNV3696
	73	Arm	CNV3697
	74	Panel Unit	CXA5913
	75	Screw	PMS20P030FZK
	76	Detach Mechanism Unit	CXA5188
	77	Washer	CBF1039
	78	Spring	CBH1484
	79	Arm	CNV3292
	80	Arm	CNV3293
	81	Holder Unit	CXA5124
	82	IC(IC971)	PA2023A
	83	Plug(CN851)	CKS1142
	84	Cord	CDE4138
	85	·····	
	86	Spacer	CNM4223
	87	Remote Control Assy	CXA6155
	88	Battery Cover	CNS2150
	89	IC(IC902)	RPM-678CBR

● The DEH-615RDS/X1B/EW, DEH-515RDS/EW, and DEH-515RDS/X1B/EW Parts Lists enumerate the parts which differ from those enumerated in the DEH-615RDS/EW Parts List only. The parts other than those enumerated in the former are identical with those in the latter, to which you are requested to refer, accordingly. The DEH-615RDS/EW Parts List is given on page 41.

Mark No.	Description	DEH-615RDS/EW, X1B/EW Part No.	DEH-515RDS/EW, X1B/EW Part No.
21	Chassis Unit	CXA6982	CXA6981
23	Tuner Amp Unit	CWX1826	CWX1825
25	Cord	·····	CDE4136
28	Plug(CN851)	·····	CKS1238
35	Bracket	CNC5016	CNC5015
45	Detach Grille Assy	CXA6943	CXA6942
54	Grille Unit	CXA6914	CXA6913
56	Key Board Unit	CWX1773	CWX1772
83	Plug(CN851)	CKS1242	·····
84	Cord	CDE4138	·····
86	Spacer	CNM4223	·····
87	Remote Control Assy	CXA6155	·····
88	Battery Cover	CNS2850	·····
89	IC(IC902)	RPM-678CBR	·····

4. CD MECHANISM MODULE EXPLODED VIEW

● **Parts List**

Mark No.	Description	Part No.
1	Screw	PMS26P040FMC
2	Control Unit	CWX1796
3	Connector(CN1001)	CKS1955
4	Connector(CN1701)	CKS2775
5	Connector(CN1002)	CKS2811
6	Connector(CN1801)	CKS2196
7	CD Mechanism Unit	CXA6965
8	Screw	BMZ20P030FMC
9	Screw	BSZ20P040FMC
10	Screw	CBA1250
11	Screw	CBA1077
12	Screw	CBA1230
13	Screw	CBA1296
14	Washer	CBF1038
15	Washer	CBF1060
16	Spring	CBH1415
17	Spring	CBH1417
18	Spring	CBH1418
19	Spring	CBH1421
20	Spring	CBH1423
21	Spring	CBH1457
22	Spring	CBH1552
23	Spring	CBH1553
24	Spring	CBH1554
25	Spring	CBH1665

Mark No.	Description	Part No.
26	Spring	CBH1556
27	Spring	CBH1557
28	Spring	CBH1558
29	Spring	CBH1664
30	Spring	CBH1560
31	Spring	CBH1576
32	Spring	CBH1577
33	Spring	CBH1666
34	Spring	CBH1583
35	Spring	CBH1628
36	Spring	CBL1170
37	Spring	CBL1171
38	Spring	CBL1200
39	Connector	CDE4147
40	PU Unit	CGY1031
41	Shaft	CLA2220
42	Roller	CLA2255
43	Shaft	CLA2256
44	Frame	CNC5661
45	Arm	CNC5565
46	Lever	CNC4891
47	Lever	CNC4892
48	Bracket	CNC4893
49	Arm	CNC4895
50	Arm	CNC5566

Mark	No.	Description	Part No.
	51	Bracket	CNC5424
	52	Spacer	CNM3315
	53	Holder	CNV4018
	54	Sheet	CNM3693
	55	Bracket	CNM3917
	56	Belt	CNT1053
	57	Clamper Unit	CXA6999
	58	Guide	CNV2891
	59	Holder	CNV3276
*	60	Roller	CNV3412
	61	Damper	CNV3974
	62	Arm	CNV3565
	63	Arm	CNV3992
	64	Gear	CNV3567
	65	Gear	CNV3568
	66	Gear	CNV3569
	67	Gear	CNV3570
	68	Arm	CNV3571
	69	Holder	CNV3572
	70	Gear	CNV3573
	71	Holder	CNV3574
	72	Holder	CNV4067
	73	Holder	CNV3576
	74	Rack	CNV3577
	75	Arm	CNV3578
	76	Plate	CNV3629
	77	Guide	CNV3694
*	78	Gathering P.C.Board	CNX2103
	79	Gathering P.C.Board	CNX2128
	80	Screw Unit	CXA2375

Mark	No.	Description	Part No.
	81	Motor Unit	CXA7150
	82	Chassis Unit	CXA6979
	83	Arm Unit	CXA5603
	84	Arm Unit	CXA5604
	85	Bracket Unit	CXA5605
	86	Lever Unit	CXA6975
	87	Arm Unit	CXA5607
	88	Arm Unit	CXA5608
	89	Gear Unit	CXA6976
	90	Motor Unit	CXA5703
	91	Bracket Unit	CXA5938
	92	Frame Unit	CXA6192
	93	Motor Unit	CXA6456
	94	Screw	JFZ17P035FNI
	95	Screw	JFZ20P014FMC
	96	Screw	JFZ20P020FZK
	97	Screw	JFZ20P025FMC
	98	Photo-transistor	PT4800
	99	Washer	YE15FUC
	100	Washer	YE20FUC
	101	•••••	
	102	Sheet	CNM4028
	103	Spring	CBH1710
	104	Spacer	CNC5436
	105	Screw	JFZ20P045FMC
	106	Washer	CBF1061
	107	Cushion	CNM4089
	108	Bracket	CNM3917
	109	Cushion	CXX1136

● **CD Mechanism Module**

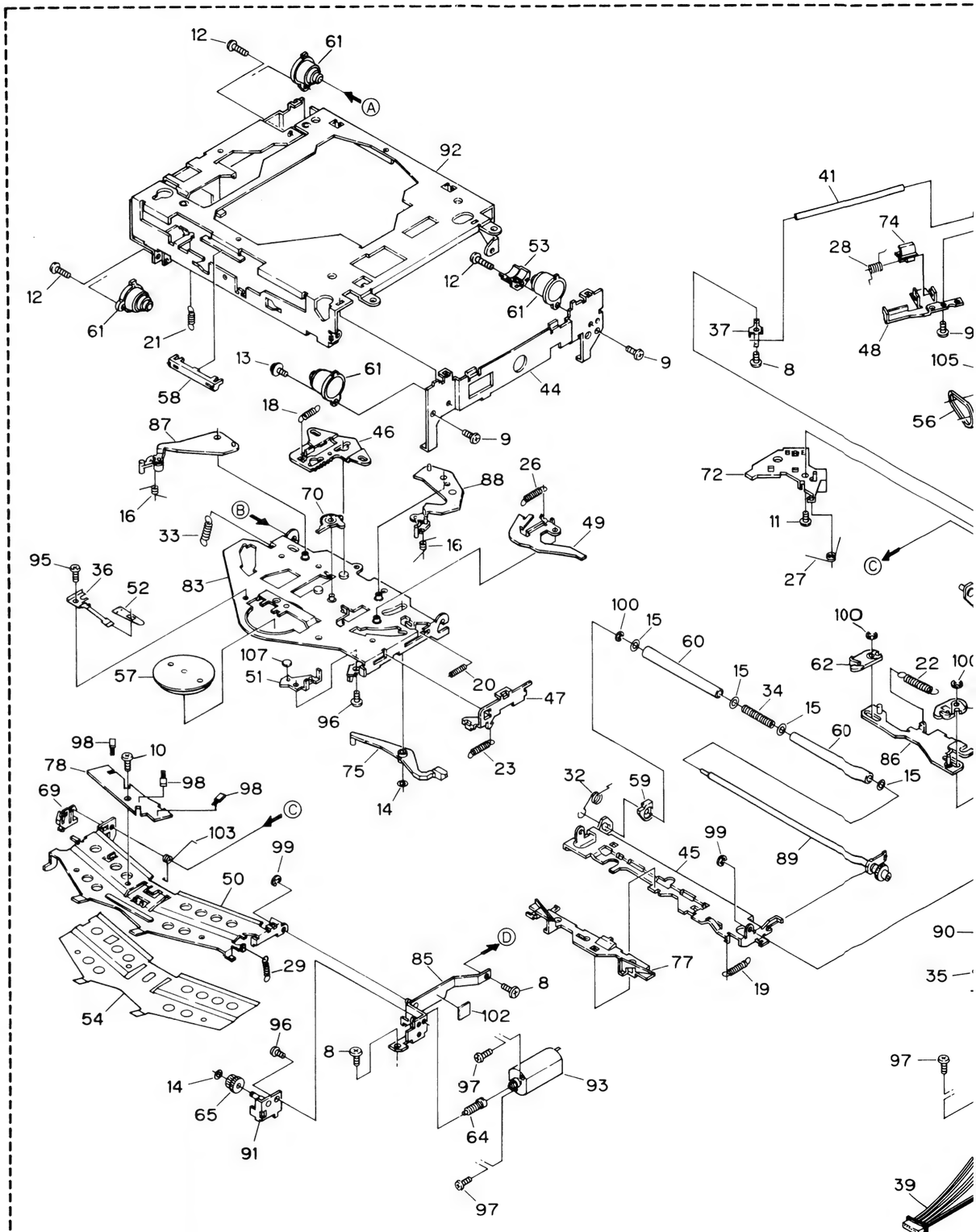

● **CD Mechanism Module**

'art No.
:XA7150
:XA6979
:XA5603
:XA5604
:XA5605

:XA6975
:XA5607
:XA5608
:XA6976
:XA5703

:XA5938
:XA6192
:XA6456
FZ17P035FNI
FZ20P014FMC

FZ20P020FZK
FZ20P025FMC
T4800
'E15FUC
'E20FUC

:NM4028
:BH1710
:NC5436
FZ20P045FMC

:BF1061
:NM4089
:NM3917
:XX1136

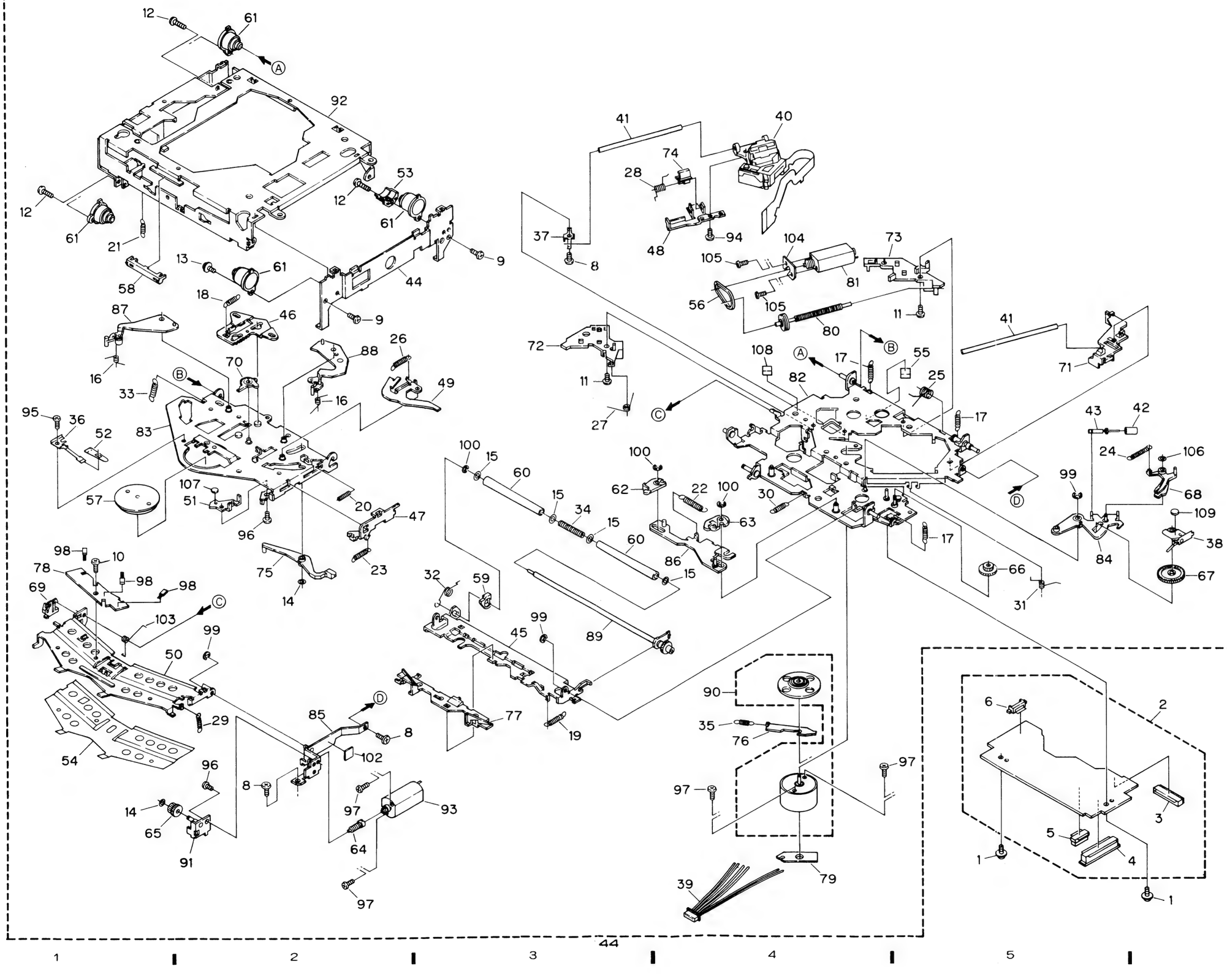

Fig.10

5. PACKING METHOD

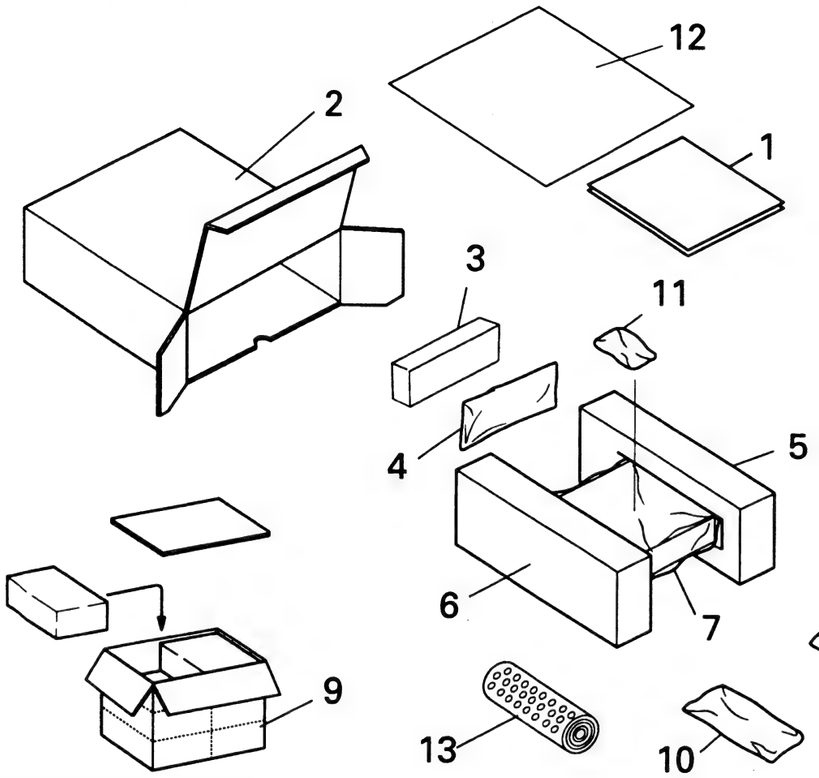

Fig.11

● **Parts List(DEH-615RDS/EW)**

✱: Non Spare Part

Mark	No.	Description	Part No.
	1-1	Owner's Manual	CRD1836
	1-2	Owner's Manual	CRD1837
	1-3	Installation Manual	CRD1838
✱	1-4	Warranty Card	CRY1071
✱	1-5	Passport	CRY1013
✱	1-6	·····	
	2	Carton	CHG2568
	3	Case	CNS3090
	4	Cord Assy	CDE4325
	5	Protector	CHP1603
	6	Protector	CHP1602
	7	Cover	CEG1092
	8	Accessory Assy	CEA1917
	9	Contain Box	CHL2568
	10	Accessory Assy	CEA1473
	11-1	Remote Control Assy	CXA6155
	11-2	Air Cushioned Bag	CEG1055
	12	Spacer	CHW1387
	13	Air Cushioned Bag	CEG1168

Owner's Manual

Model	Part No.	Language
DEH-615RDS/EW, X1B/EW	CRD1836	English,French,Italian,German,Dutch,Spanish,Portuguese
DEH-615RDS/EW, X1B/EW	CRD1837	Swedish,Norwegian,Finnish

Installation Manual

Model	Part No.	Language
DEH-615RDS/EW, X1B/EW DEH-515RDS/EW, X1B/EW	CRD1838	English,French,Italian,German,Dutch,Spanish,Portuguese Swedish,Norwegian,Finnish

● The DEH-615RDS/X1B/EW, DEH-515RDS/EW, and DEH-515RDS/X1B/EW Parts Lists enumerate the parts which differ from those enumerated in the DEH-615RDS/EW Parts List only. The parts other than those enumerated in the former are identical with those in the latter, to which you are requested to refer, accordingly. The DEH-615RDS/EW Parts List is given on page 46.

Mark	No.	Description	615RDS/EW Part No.	515RDS/EW Part No.	615RDS/X1B/EW Part No.	515RDS/X1B/EW Part No.
✱	1-4	Warranty Card	CRY1071	CRY1071	·····	·····
✱	1-5	Passport	CRY1013	CRY1013	CRY1014	CRY1014
✱	1-6	Card	·····	·····	URY-001	URY-001
	2	Carton	CHG2568	CHG2569	CHG2568	CHG2569
	3	Case	CNS3090	CNS3090	UNS2269	UNS2269
	5	Protector	CHP1603	CHP1603	·····	·····
	6	Protector	CHP1602	CHP1602	UHP-009	UHP-009
	7	Cover	CEG1092	CEG1092	UEG-002	UEG-002
	9	Contain Box	CHL2568	CHL2569	UHD-002	UHD-002
	10	Accessory Assy	CEA1473	·····	CEA1473	·····
	11-1	Remote Control Assy	CXA6155	·····	CXA6155	·····
	11-2	Air Cushioned Bag	CEG1055	·····	CEG1055	·····

● **Accessory Assy**

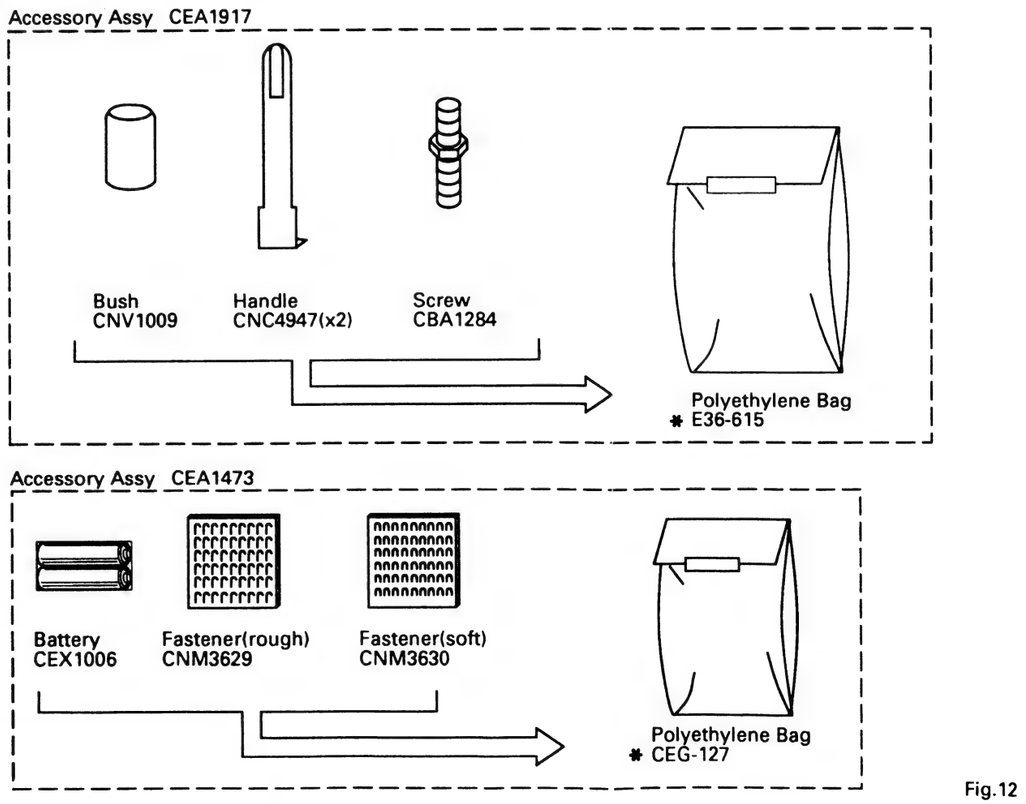

Fig.12

PIONEER
The Art of Entertainment

Service Manual

● DEH-605RDS

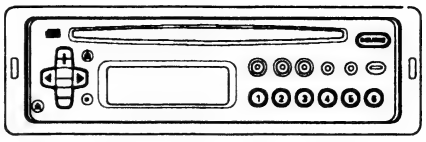

ORDER NO.
CRT1563

The chapter 1 of this Service Manual will not be reprinted. On your additional orders, we may supply only the chapter 2. For the chapter 1, please make copies and attach to the chapter 2 at your side if necessary.

HIGH POWER CD PLAYER WITH RDS TUNER

DEH-605RDS EW,X1B/EW

HIGH POWER CD PLAYER WITH FM/MW/LW TUNER

DEH-505SDK GR
DEH-505 EW,X1B/EW
DEH-405SDK GR
DEH-405 EW,X1B/EW

● **See the service manual CX-540(CRT1574) for the CD mechanism description, disassembly and circuit description.**

● **The CD mechanism employed in this model is one of CX-540 series.**

CONTENTS

CHAPTER 1

1. SPECIFICATIONS 1-3
2. OPERATION AND CONNECTION 1-3
3. DISASSEMBLY 1-10
4. ADJUSTMENT 1-23
5. ERROR NUMBERS AND NEW TEST MODE 1-35
6. EXPLODED VIEW PARTS LIST 1-38
7. ELECTRICAL PARTS LIST 1-41

CHAPTER 2

1. PACKING METHOD 2-2
2. BLOCK DIAGRAM 2-7
3. EXPLODED VIEW 2-9
4. CIRCUIT DIAGRAM AND PATTERN

4.1 TUNER AMP UNIT(DEH-605RDS) 2-13
4.2 TUNER AMP UNIT(DEH-505SDK,405SDK) 2-18
4.3 TUNER AMP UNIT(DEH-505,405) 2-23
4.4 CD MECHANISM MODULE 2-28
4.5 FM/AM TUNER UNIT 2-37
4.6 KEY BOARD UNIT(DEH-605RDS) 2-41
4.7 KEY BOARD UNIT(DEH-505SDK,505,405SDK,405) 2-43

PIONEER ELECTRONIC CORPORATION 4-1, Meguro 1-Chome, Meguro-ku, Tokyo 153, Japan
PIONEER ELECTRONICS SERVICE INC. P.O.Box 1760, Long Beach, California 90801 U.S.A.
PIONEER ELECTRONICS OF CANADA, INC. 300 Allstate Parkway Markham, Ontario L3R 0P2 Canada
PIONEER ELECTRONIC [EUROPE] N.V. Haven 1087 Keetberglaan 1, 9120 Melsele, Belgium
PIONEER ELECTRONICS AUSTRALIA PTY.LTD. 178-184 Boundary Road, Braeside, Victoria 3195, Australia TEL:[03]580-9911

© **PIONEER ELECTRONIC CORPORATION 1994**

K-FFK. JAN. 1994 Printed in Japan

CHAPTER 1

● CD Player Service Precautions

1. For pickup unit(CGY1031) handling,please refer to"Disassembly"(CX-540 Service Manual CRT1574). During replacement,handling precautions shall be taken to prevent an electrostatic discharge(protection by a short pin).
2. During disassembly,be sure to turn the power off since an internal IC might be destroyed when a connector is plugged or unplugged.

SAFETY INFORMATION

1. Safety Precautions for those who Service this Unit.

- **Follow the adjustment steps (see pages 1-26 through 1-32)in the service manual when servicing this unit. When checking or adjusting the emitting power of the laser diode exercise caution in order to get safe, reliable results.**

Caution:

1. During repair or tests, minimum distance of 13cm from the focus lens must be kept.
2. During repair or tests, do not view laser beam for 10 seconds or longer.

2. A "CLASS 1 LASER PRODUCT" label is affixed to the rear of the player.

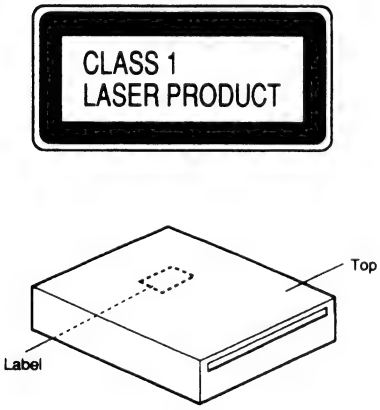

3. The triangular label is attached to the mechanism unit frame.

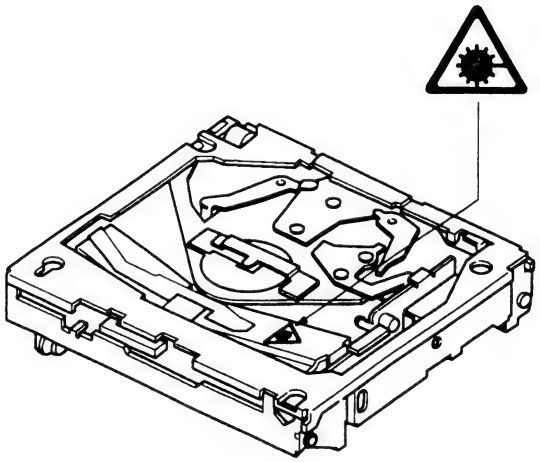

4. Specifications of Laser Diode

Specifications of laser radiation fields to which human access is possible during service.
Wavelength = 785 nanometers
Radiant power = 69.7 microwatts(Through a circular aperture stop having a diameter of 80 millimeters)
0.55 microwatts(Through a circular aperture stop having a diameter of 7 millimeters)

1. SPECIFICATIONS

General

Power source ..... 14.4 V DC (10.8 — 15.6 V allowable)
Grounding system ..... Negative type
Max. current consumption ..... 6 A
Dimensions (chassis) ..... 178 (W) × 50 (H) × 150 (D) mm
(front face) ..... 188 (W) × 58 (H) × 20 (D) mm
Weight ..... 1.5 kg

Amplifier

Max. power output ..... 22 W × 4 (EIAJ)
Continuous power output ..... 14 W × 4
(DIN 45324, +B=14.4 V)
Load impedance ..... 4Ω (4 — 8Ω allowable)
Preout output level/
output impedance ..... 500 mV/1 kΩ
Tone controls (bass) ..... ±10 dB (100 Hz)
(treble) ..... ±10 dB (10 kHz)
Loudness contour ..... +10 dB (100 Hz), +7 dB (10 kHz)
(volume: –30 dB)

CD player

System ..... Compact disc audio system
Usable discs ..... Compact disc
Signal format ..... Sampling frequency: 44.1 kHz
Number of quantization bits: 16; linear
Frequency characteristics ..... 5 — 20,000 Hz (±1 dB)
Signal-to-noise ratio ..... 94 dB (1 kHz) (IEC-A network)
Dynamic range ..... 90 dB (1 kHz)
Number of channels ..... 2 (stereo)

FM tuner

Frequency range ..... 87.5 — 108 MHz
Usable sensitivity ..... 11 dBf (1.0μV/75Ω, mono, S/N: 30 dB)
50 dB quieting sensitivity ..... 16 dBf (1.7μV/75Ω, mono)
Signal-to-noise ratio ..... 70 dB (IEC-A network)
Distortion ..... 0.3% (at 65 dBf, 1 kHz, stereo)
Frequency response ..... 30 — 15,000 Hz (±3 dB)
Stereo separation ..... 40 dB (at 65 dBf, 1 kHz)

MW tuner

Frequency range ..... 531 — 1,602 kHz
Usable sensitivity ..... 18μV (25 dB) (S/N: 20 dB)
Selectivity ..... 50 dB (±9 kHz)

LW tuner

Frequency range ..... 153 — 281 kHz
Usable sensitivity ..... 30μV (30 dB) (S/N: 20 dB)
Selectivity ..... 50 dB (±9 kHz)

Note:

Specifications and the design are subject to possible modification without notice due to improvements.

2. OPERATION AND CONNECTION

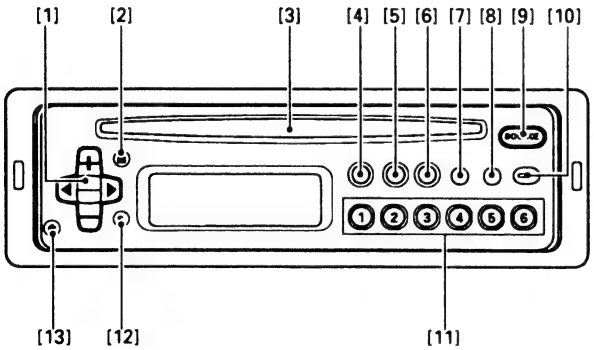

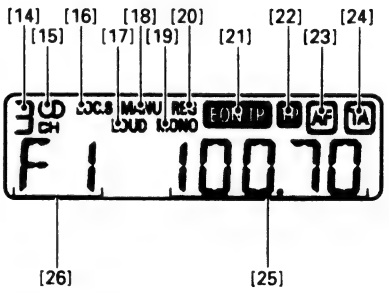

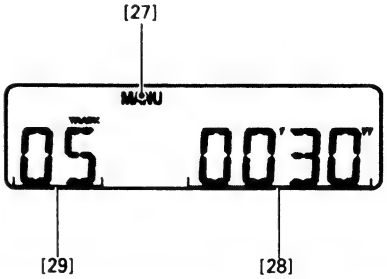

Changing the Source

Parts Identification
[9] Source

Changing the Source

Each time the button [9] is pressed, the source will change in the following sequence:
Built-in CD player → Tuner → OFF
- If there is no disc in the built-in CD player, the source will not change to "built-in CD player".

Adjusting the Audio

Parts Identification
[1] Volume/Audio adjustment
[12] Shift
[17] Loudness

Mode Selection

Each press of button [12] changes the mode as follows:
Volume adjustment (VOL) → Balance adjustment (FAD/BAL) → Tone adjustment (BAS/TRE) → Loudness adjustment (LOUD)
- When you're adjusting fader, balance, bass or treble, the indicator will stop at the center setting. About 8 seconds after adjustment, the display returns to its previous state.

Volume Adjustment
Pressing the (+) side of button [1] increases the volume, while the (–) side decreases it.
(Display shows "VOL 00" ~ "VOL 30".)
- When driving your vehicle, be sure to keep the volume of the unit set low enough to allow you to hear sounds coming from outside.

Balance Adjustment
Press button [12] to select balance adjustment mode. ("FAD" appears on the display.) Adjust the fader using the (+) or (–) side of button [1]. To adjust the balance, press either the (◄) or (►) side of button [1] to turn on BAL.

Fader
Press the (+) side of button [1] to raise the volume of the front speaker only. Press the (–) side of the button to raise the volume of the rear speaker only.
(Display shows "FAD F9" ~ "FAD R9".)
- Please set "FAD 0" when using 2 speaker system.

Balance
Pressing the (◄) side of button [1] shifts the balance to the left speaker, while the (►) side shifts it to the right speaker.
(Display shows "BAL L9" ~ "BAL R9".)

Tone Adjustment
Press button [12] to select tone adjustment mode. ("BAS" appears.) Select the tone you wish to adjust using the (◄) or (►) side of button [1]. Each press of the (►) side changes the tone from BAS → TRE, while each press of the (◄) side changes the tone from TRE → BAS.

Bass Adjustment
Select the Bass mode.
Pressing the (+) side of button [1] increases bass, while the (–) side decreases bass.
(Display shows "BAS –6" ~ "BAS +6".)

Treble Adjustment
Select Treble adjustment mode.
Pressing the (+) side of button [1] increases treble, while the (–) side decreases treble.
(Display shows "TRE –6" ~ "TRE +6".)

Loudness Adjustment
This "loudness" function enhances both the high and low ranges of sound to give even more power to output even at low volume.
Press button [12] to select loudness adjustment mode. (The "LOUD" indicator appears on the display.)
Pressing the (►) side of button [1] turns the loudness function on (LOUD [17] light up), pressing the (◄) side turns it off.

Using the Tuner

Parts Identification

[1] Tuning
Seek/Manual
Local Seek Sensitivity
[4] Local mode
[5] BSM/Preset Scan
[6] FM Monaural
[7] AF/REG
[8] TA/EON
[9] Source
[10] Band
[11] Preset
[14] Preset Number
[15] FM Stereo
[16] Local mode
[18] Manual
[19] FM Monaural
[20] REG
[21] EON
[22] TP
[23] AF
[24] TA
[25] Frequency
[26] Band

Electronic Tuner

Frequency allocation differs depending upon the area. This unit has been designed in accordance with the frequency allocations for Western Europe, Asia, the Middle and Near East, Africa, Australia and Oceania. Use in other areas may result in improer reception of AM. The RDS function does not work in regions with no RDS broadcast services.

Listening to the Radio

1. Set the source to "tuner" by pressing button [9].
   • For details, refer to "Changing the Source" on page 1-4.
2. Select the band by pressing button [10]. Each time the button is pressed, the band will change in the following sequence: FM1 → FM2 → FM3 → MW/LW
   • MW and LW are combined in one band.
3. Use seek tuning or manual tuning to tune to a radio station.

3-1. Set the tuning mode to "seek" or "manual" by pressing the (◄) and (►) sides of button [1] simultaneously. Repeat this operation to switch to the other tuning mode. (When the manual tuning mode is set, "MANU" [18] will be displayed.)

3-2. Tune by Press (◄) or (►) of button [1]. (When there is a stereo broadcast, "⊙" [15] will be displayed.)

Seek Tuning:
When the button is pressed, stations whose signal strength is above a certain level will be tuned automatically.

Manual Tuning:
When the button is pressed, the frequency will change by one step up or down.

Using the Preset Memory

The radio stations can be stored in memory under buttons 1 to 6 of [11].

1. Tune in to the station to be stored in memory.
2. Store the station in memory by pressing one of the buttons (1 to 6) for at least 2 seconds. When the [14] number stops blinking, the station will be stored in memory under the button pressed.
   • Up to 18 FM stations and 6 MW/LW stations can be stored in memory.

Preset Tuning

The radio stations stored in memory can be recalled by pressing the respective button 1 to 6 of [11]. The station stored under that button will be recalled. (The number of the button pressed will be displayed at [14].)

Using the Best Stations Memory (BSM)

The radio stations having a strong signal can be tuned automatically and stored in memory under buttons 1 to 6 [11]. Press button [5] for at least 2 seconds. (The "BSM" will blink.) After "BSM" stops blinking, the stations will be stored in memory under buttons 1 to 6 of [11].

- BSM can be canceled mid-operation by pressing button [5].
- The stations will be stored under buttons 1 to 6 in the order of their signal strength. The strongest station will be stored under button 1, followed by stations with lower signal strengths.
- If there are fewer than 6 stations whose signal is strong, there will be spare memory.
- It will take almost 30 seconds for BSM to be completed.

Preset Scan Tuning

This recalls in sequence all the stations stored in memory under the buttons [11] for 8 seconds each. Press button [5]. (The [14] number will blink.) To cancel, press the button again. After the desired station is tuned, cancel the preset scan tuning. The station will then continue to be received.

- Stations stored in memory under the buttons [11] but whose signal is weak will not be recalled.

Local Seek Tuning

When the local mode is set, the seek tuning's sensitivity level will become high and only stations with a strong signal will be seek tuned. The local mode's seek sensitivity can be adjusted.

Setting the Local Mode

Press button [4]. (The "LOC.S" [16] will light.) To cancel the local mode, press the button again.

Adjusting the Local Seek Sensitivity

There are 4 local seek sensitivity steps for FM and 2 steps for MW/LW.

- LOC-4 is the highest seek tuning sensitivity level. Only the stations with a strong signal are tuned. LOC-3, LOC-2, and LOC-1 in descending order enables the tuning of stations with a respectively weaker signal.

1. Set to local seek sensitivity adjustment mode. Press button [4] for at least 2 seconds. (The current sensitivity level "LOC-2" will be displayed.)
   - The local seek sensitivity adjustment mode will be canceled after about 5 seconds.
2. Adjust the sensitivity level by pressing (◄) or (►) of button [1].

FM Monaural Reception

If a stereo broadcast has a lot of noise, switching to the monaural reception mode will reduce the noise. Press button [6]. ("MONO" [19] will appear on the display.) To cancel, press the button again.

Playing Compact Discs

Parts Identification

[1] Track Number Search
Fast Forward and Reverse
[2] Eject
[3] Disc Insertion Slot
[9] Source
[11] ① Pause
② Repeat
③ Random play
[27] Manual
[28] Playback time
[29] Track number

Discs

- Only use compact discs (optical digital audio discs) bearing the mark shown below.

- Do not use cracked, scratched, or warped discs.
- Do not touch the disc's playing side. Handle the disc as shown below.

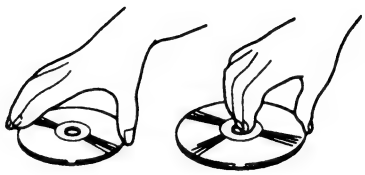

- Do not affix any label on the disc.
- Do not apply any vinyl record spray, antistatic agent, benzene, paint thinner, or any other volatile chemicals.

- Do not play a dirty disc. Use a soft cloth to clean a dirty disc as shown below. Wipe the disc outward from the center.

- Do not place the disc in high temperatures and direct sunlight.
- Be sure to store the disc in its case.

CD Playing Environment

- Disc playback may be interrupted by sudden road shock.
- When the air temperature is low and the car heater is turned on, condensation on the disc and internal parts of the unit may prevent proper playback operation. If this happens, turn off the unit and wait one hour until the condensation is gone. Also, use a soft cloth to wipe off any condensation from the disc.

Listening to the CD Player

1. With the label side up, insert a disc into [3]. Playback will start. (The track number [29] and playback time [28] will be displayed.)
   - Do not insert the disc with the label side down. Doing so may scratch the disc.
   - If the disc stops midway while it is being inserted or if there is no playback after a disc is inserted, something may be wrong with the disc. Eject the disc and check it.
2. Turn ON/OFF the disc playback. Press button [9] to change the source.
   - For details, refer to "Changing the Source".
3. Eject the disc by pressing button [2].
   - Do not leave the disc halfway into the unit as shown below. Doing so may cause the disc to be bent or dropped.

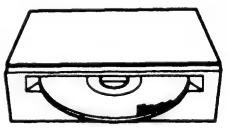

Using Track Number Search, Fast Forward and Reverse

1. Set the mode to "track number search" or "fast forward and reverse".
   Press the (◄) and (►) sides of button [1] simultaneously. Each time this is repeated, the mode will switch between the track number search mode and fast forward and reverse mode. (When the fast forward and reverse mode is set, "MANU" [27] will light.)
2. Execute a track number search or fast forward and reverse by pressing (◄) and (►) of button [1].

- Playback sound can be heard during fast forward and reverse.

Pausing

The disc playback can be stopped temporarily by pressing ① of button [11]. (The "PAUSE" will be displayed.) To cancel the pause, press the button again.

Repeat

1. To repeat the music you are listening to, press button ② of [11] ("RPT" will appear on the display).
2. To cancel music repeat, press button ② of [11] to turn off "RPT".

Random Play

1. To play music randomly, press button ③ of [11] ("RDM" will appear on the display). Once the current track has been played, the microprocessor will randomly select the next and subsequent tracks.
2. To cancel random play, press button ③ of [11] to turn off "RDM".

- Since selections are played in random order, the same selection may be played twice in succession.

Error Display

If there is a problem with CD playback, an error code will be displayed.
(Ex.: "ERROR-10")
If an error is displayed, refer to the table below to identify the problem. If the error is displayed even after corrective action is taken, contact your dealer or the nearest authorized PIONEER Service Station.

D: Display
C: Cause
T: Treatment

D: ERROR-11, 12, 14, 17, 30
C: The disc is dirty.
T: Clean the disc.

D: ERROR-11, 12, 17, 30
C: The disc is scratched.
T: Replace the disc.

D: ERROR-11, 14, 17
C: The disc is inserted with the label side down.
T: Insert the disc with the label side up.

D: ERROR-14
C: An unrecorded CD-R is being used.
T: Check the disc.

D: Display
C: Cause
T: Treatment

D: ERROR-10, 11, 12, 14, 17, 30, A0
C: Electrical or mechanical fault.
T: Turn off the car's ignition and turn it back on again. Or change the source to another one and then change it back to CD.

D: HEAT
C: The CD player's internal temperature is high.
T: Wait until the CD player's internal temperature goes down.

Additional Functions

Parts Identification
[12] Illumination

Switching Illumination Color

The illumination color can be set to amber or green.
Press button [12] for at least 2 seconds. Repeat this operation to switch between amber and green.

Connecting the Units

Note:

- *This unit is for vehicles with a 12-volt battery and negative grounding. Before installing it in a recreational vehicle, truck, or bus, check the battery voltage.*
- *To avoid shorts in the electrical system, be sure to disconnect the battery ⊖ cable before beginning installation.*
- *After completing installation and wiring, double check that there are no mistakes. Re-install any parts removed from the car during installation, then connect the battery negative terminal.*
- *Refer to the owner's manual for details on connecting the various cords of the power amp and other units, them make connections correctly.*
- *Secure the wiring with cable clamps or adhesive tape. To protect the wiring, wrap adhesive tape around them where they lie against metal parts.*
- *Route and secure all wiring so it cannot touch any moving parts, such as the gear shift, handbrake, and seat rails. Do not route wiring in places that get hot, such as near the heater outlet. If the insulation of the wiring melts or gets torn, there is a danger of the wiring short-circuiting to the vehicle body.*
- *Don't pass the orange lead through a hole into the engine compartment to connect to the battery. This will damage the lead insulation and cause a very dangerous short.*
- *Do not shorten any leads. If you do, the protection circuit may fail to work when it should.*
- *Never feed power to other equipment by cutting the insulation of the power supply lead of the unit and tapping into the lead. The current capacity of the lead will be exceeded, causing over heating.*
- *When replacing fuses, be sure to use only fuses of the rating prescribed on the fuse holder.*
- *Since a unique BPTL circuit is employed, never wire so the speaker leads are directly grounded or the left and right speaker ⊖ leads are common.*
- *Speakers connected to this unit must be high-power type possessing maximum input of at least 22 W and impedance of 4 to 8 ohms. Connecting speakers with output and/or impedance values other than those noted here can damage the speakers.*
- *When the power amp is being linked with this system, be sure not to connect the blue lead to the amp's power terminal. Likewise, when linking this system with the auto-antenna, do not connect to power terminal for the antenna. Such connection can make overcurrent cause malfunctions.*
- *When the unit is mounted in a vehicle whose ignition switch does not have the ACC (accessory) position as shown in Fig. 2, be sure to connect the red lead of the unit to the terminal controlled by the ignition switch ON/OFF position. If you do not, the vehicle battery may go flat when you leave your vehicle for several hours.*
  (Fig. 1: ACC position/Fig. 2: No ACC position)

Connection Diagram (Fig. 3)

1. Power amp (sold separately)
2. Connecting cords with RCA pin plugs (sold separately)
3. Blue
4. Front/left speaker
5. Front/right speaker
6. Green
7. Gray
8. Green/black
9. Gray/black
10. Rear/left speaker
11. Rear/right speaker
12. Green/red
13. Gray/red
14. Black/green
15. Black/gray
16. Connected only when the optional amplifier is used. Nothing is connected when operating the built-in amplifier itself.
17. White
18. Red
19. Rear out
20. Front out (DEH-605RDS, DEH-405 and DEH-405SDK do not have this terminal.)
21. Antenna jack
22. Blue
    To system control terminal of the power amp or Auto-antenna relay control terminal (Max. 300 mA 12 V DC).
23. Fuse holder
24. Fuse resistor
25. Black (ground)
    To vehicle (metal) body.
26. Orange
    To terminal always supplied with power regardless of ignition switch position.
27. Red
    To electric terminal controlled by ignition switch (12 V DC) ON/OFF.

Fig.1

Fig.2

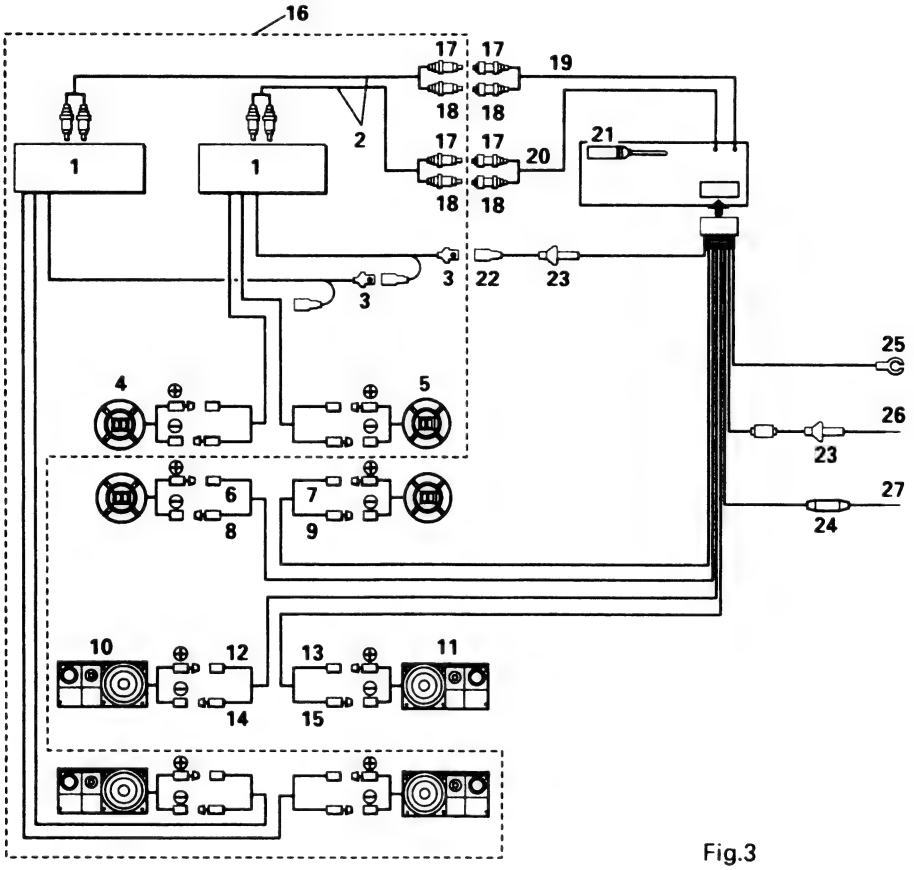

Fig.3

3. DISASSEMBLY

● Removing the Case

1.Remove the three screws.
2.Insert and turn a flat screwdriver at locations indicated by arrows to remove the case.

● Removing the Detach Grille Assy

1.Press the detach button, and then pull detach grille Assy.

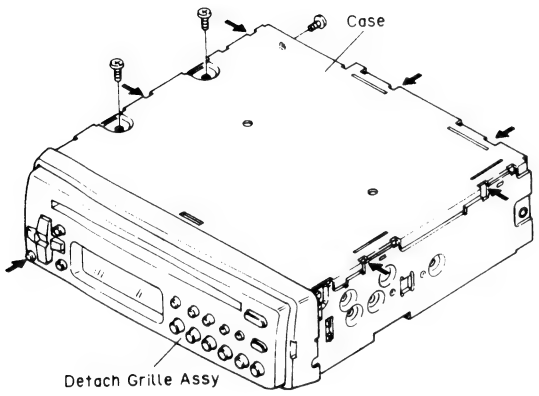

Fig.4

● Removing the Panel Unit

1.Remove the screw B and disconnect the two stoppers indicated by arrows.
2.Disconnect the connector.

● Removing the CD Mechanism Module

1.Remove the four screws A.
2.Disconnect the connector.
3.Remove the CD Mechanism Module.

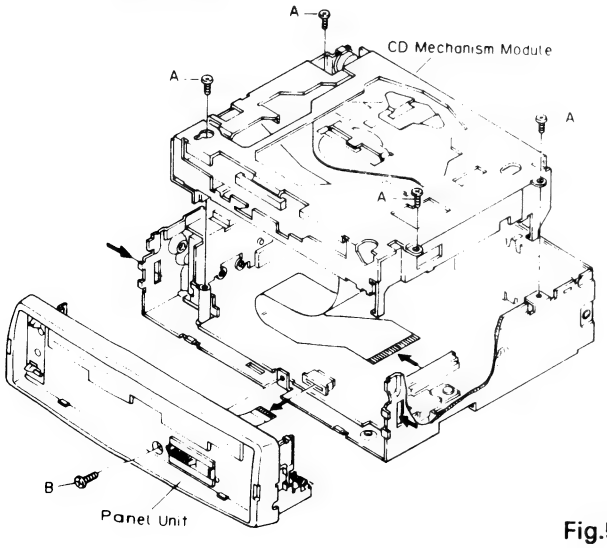

Fig.5

● Removing the Chassis Unit

1.Remove the two screws C.
2.Remove the screw D and E.
3.Remove the screw F and then remove the holder.
4.Stretch the four claws.
5.Remove the chassis Unit

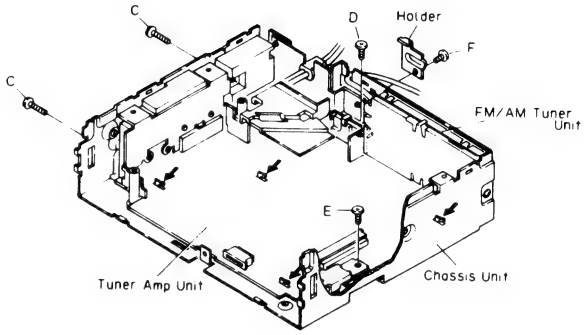

Fig.6

● ICs

PA2021B

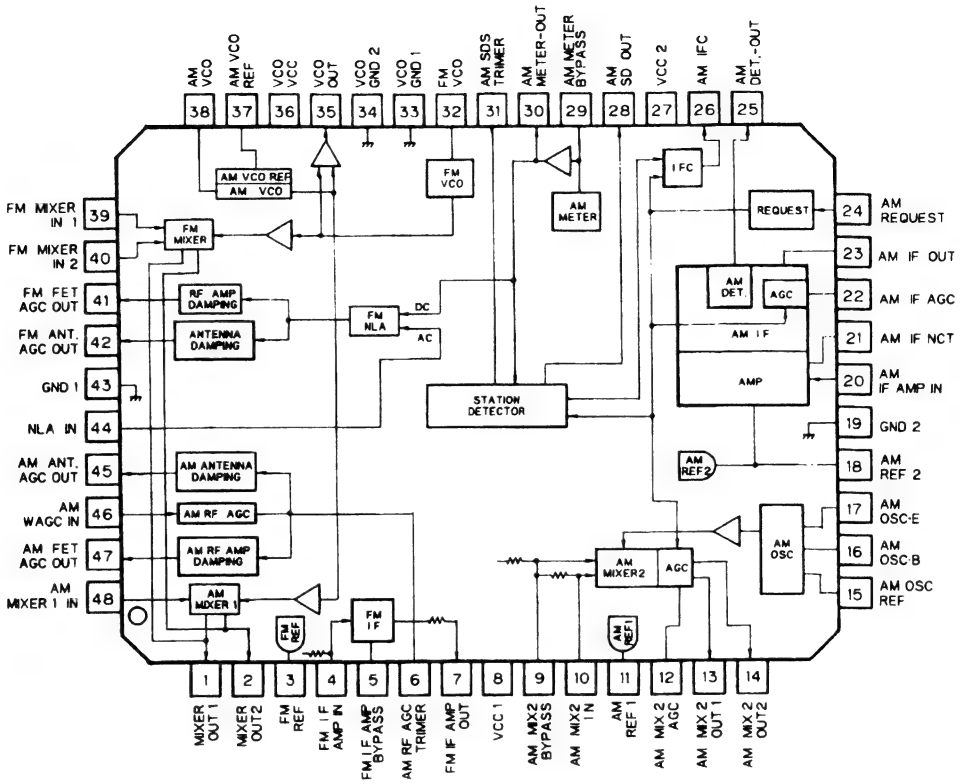

PA2022A

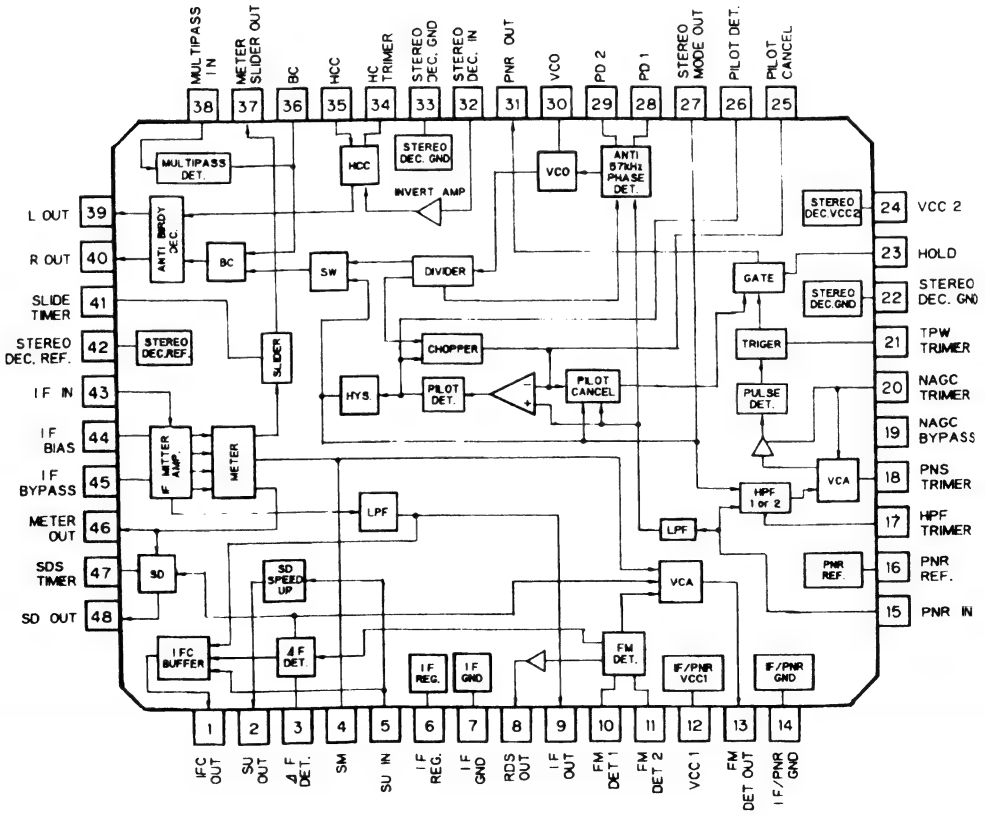

NJM4558L

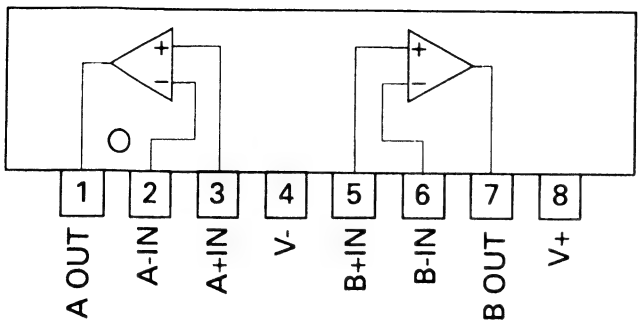

NJM4558MD

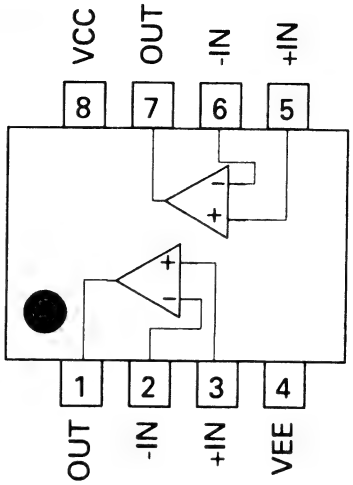

*LC7538JMHS

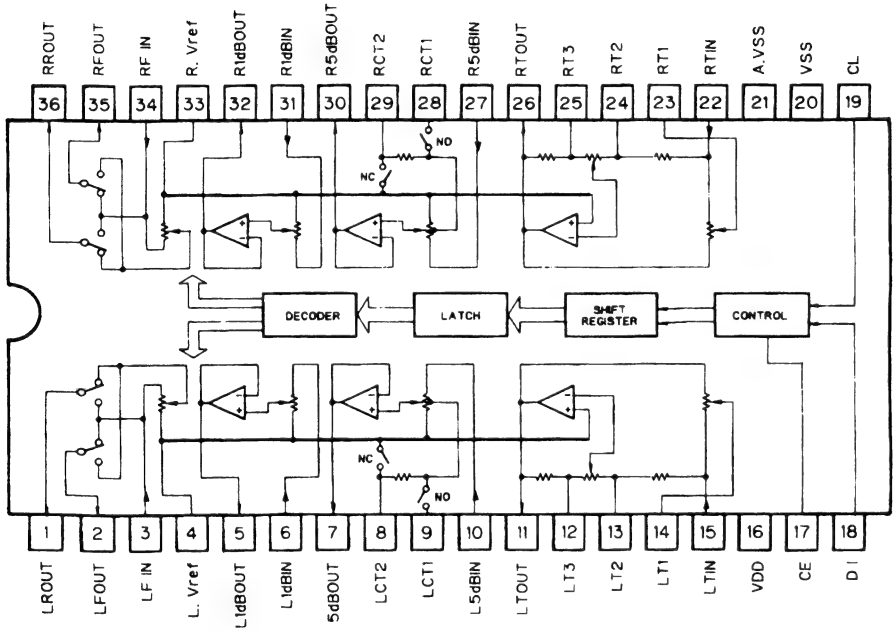

PA3029A

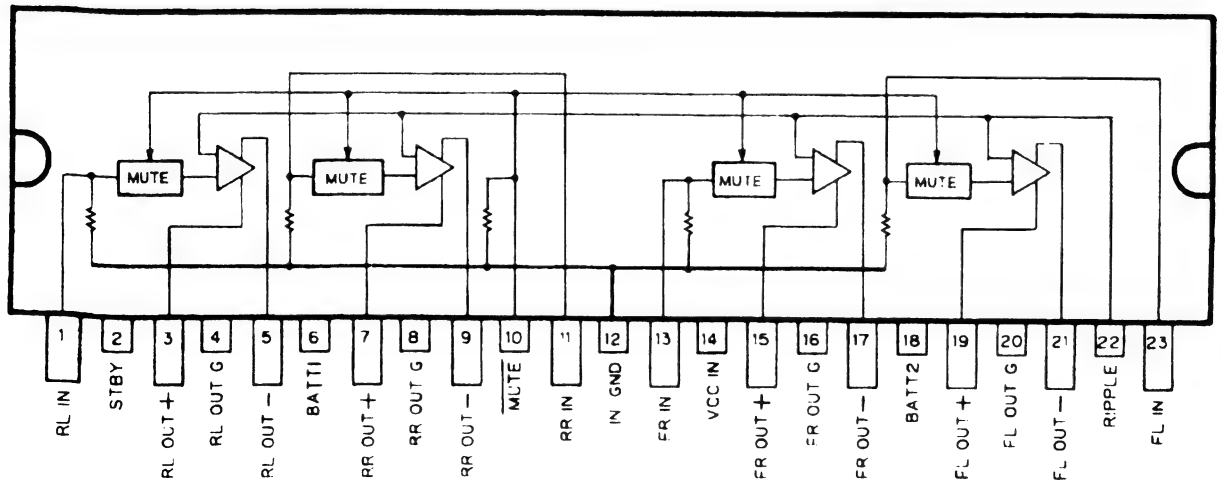

● **Pin Functions(PDR009B)**

Pin No.	Pin Name	I/O	Output Format	Function and Operation
1–3	KD3–KD1	I		Analog key input
4	AVSS	I		A/D coverter GND
5,6	NC			Not used
7	AVREF1	I		D/A converter reference voltage
8	LCE	O		Chip enable output for LCD driver
9	LDT	O	C	Data output for LCD driver
10	$\overline{\text{RST}}$	O	C	LSI reset output
11,12	NC			Not used
13	SK	I		SK signal input
14	XA0	O		Control signal distinguishing data from microcomputer
15	$\overline{\text{XSTB}}$	O	C	LSI data output
16	XSI	I		LSI data input
17	XSO	O	C	LSI data output
18	$\overline{\text{XSCK}}$	O	C	LSI clock output
19	CONT	O	C	Servo driver power supply control
20	LOAD	O	C	Loading motor LOAD control
21	EJET	O	C	Loading motor EJECT control
22	CD5VON	O	C	CD +5V control
23	NC			Not used
24	CDMUTE	O	C	CD mute output
25	$\overline{\text{TMUTE}}$	O	C	Tuner mute output
26	VDCONT	O	C	VD control input
27	FOK	I		FOK signal input
28	MIRR	I		Mirror detector input
29	LOCK	I		Spindle lock detector input
30	CLAMP	I		Disc clamp sense input
31	$\overline{\text{HOME}}$	I	C	Home position detector input
32	FECNT	O	C	FE output control pin
33	VSS			GND
34	VDSENS	I		VD over voltage sense input
35	VMC	O	C	Loading motor driver power supply
36	NC			Not used
37	$\overline{\text{ADENA}}$	O	N	A/D converter reference voltage output
38	NC			Not used
39	CDPW	O	N	CD power control
40	LCK	O		Clock output for LCD driver
41	SYSPW	O	C	System power supply control output
42	BLGTA	O	C	LCD back light amber control output
43	BLGTG	O	C	LCD back light green control output
44	$\overline{\text{SWVDD}}$	O	C	Key board unit power supply control output
45	PEE	O	C	Beep tone output
46	VDT	O	C	Data output for electronic volume
47	VST	O	C	Strobe pulse output for electronic volume
48	VCK	O	C	Clock output for electronic volume
49	PCL	O	C	Clock adjustment output
50	FM/$\overline{\text{AM}}$	O	C	FM/AM power select output
51	MONO	O	C	Forced mono output
52–55	SIMK0–3	I		Model select input
56	MUTE	O	C	Mute output
57	NC			Not used
58	$\overline{\text{DK}}$	I		DK signal input
59	SD	I		SD input
60	$\overline{\text{RESET}}$	I		Reset input
61	$\overline{\text{REMIN}}$	I		Remote control signal input
62	$\overline{\text{BSENS}}$	I		Back up power sense input
63	$\overline{\text{ASENS}}$	I		ACC power sense input
64	PDI	I		PLL data input

Pin No.	Pin Name	I/O	Output Format	Function and Operation
65	PDO	O	C	Data output for PLL IC
66	PCK	O	C	Serial clock output for PLL IC
67	PCE	O	C	Chip enable output for PLL IC
68	VDD			Power supply
69,70	X2,X1			Crystal oscillator connection pin
71	IC			Connect to GND
72	XT2			Not used
73	TESTIN	I		Test program start input
74	AVDD			Positive power supply terminal for analog circuit
75	AVREF0	I		A/D converter reference voltage
76	SL	I		SD level input from tuner
77	TEMP	I		Temperature detector
78	DINC	I		Disc insert sense input
79	EJTD	I		Disc eject position sense input
80	KD0	I		Analog key input

*PDR009B

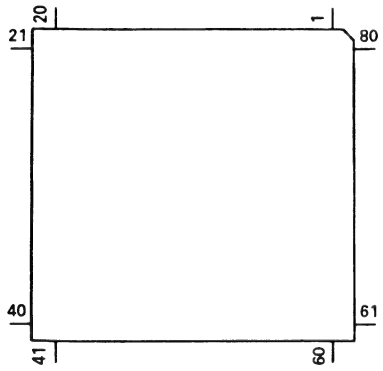

Output Format	Meaning
C	CMOS
N	N channel open drain

IC's marked by are MOS type.*
Be careful in handing them because they are very liable to be damaged by electrostatic induction.

PA2023A

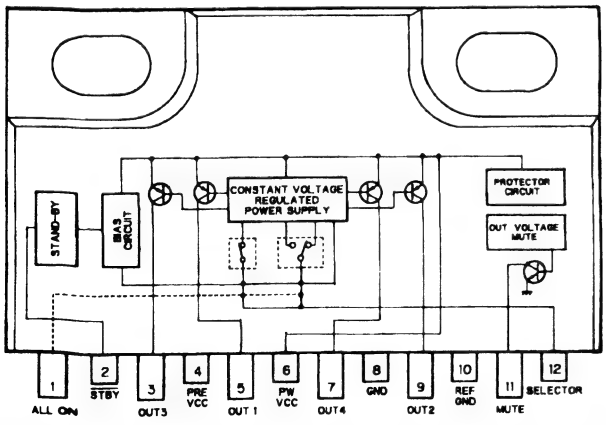

CWV1045

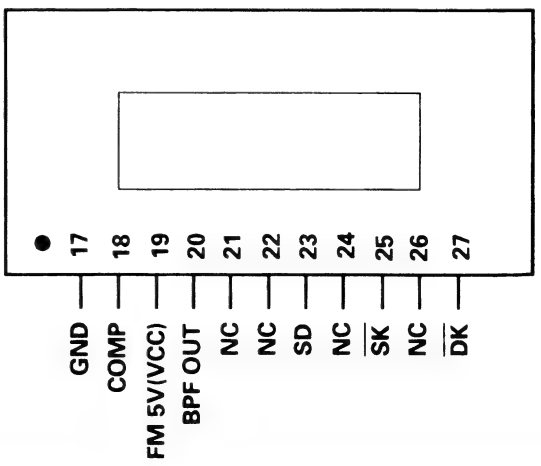

● Pin Functions (CWV1044)

Pin No.	Pin Name	I/O	Function and Operation
1	VDD		Power supply for RDS controller
2	GND		GND
3	RDSRDY	I	Ready input from system control IC
4	$\overline{\text{RDSEN}}$	O	Enable output for system control IC
5	$\overline{\text{RDSCK}}$	I	Serial clock input from system control IC
6-9	RDSDT 7-4	I/O	Data input/output to system control IC
10	RDSSEL	I	Select input from system control IC
11	$\overline{\text{RDSRST}}$	I	Reset input from system control IC
12	SCHK	I	Unit check input
13	TUNSEL	I	FM/AM tuner unit select input
14-16	VACANT		
17	GND		GND
18	COMP	I	FM composite signal input
19	FM 5V(VCC)		Power supply decoder
20	BPF OUT	O	Band pass filter test output
21	SL CHK	O	SL check output
22	FL CHK	O	FL check output
23	SD	I	RDS decode control input
24	SL(FM)	I	Signal level input from tuner
25	$\overline{\text{SK}}$	I	SK signal detect input
26	$\overline{\text{RLOCK}}$	O	RDS test output
27	$\overline{\text{DK}}$	O	DK signal detect output
28	ERROR	O	Disapprove of error correction output
29	CORR	O	Error output
30	RECEIVE	O	RDS synchronizing test output

CWV1044

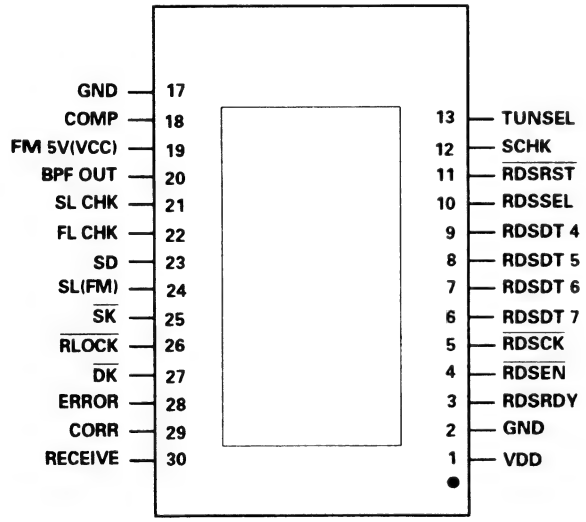

PAJ001A

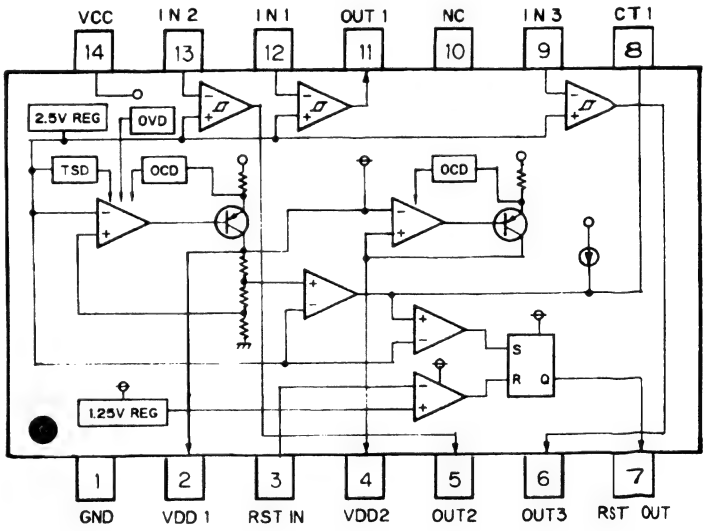

● **Pin Functions(PD4483B)**

Pin No.	Pin Name	I/O	Output Format	Function and Operation
1	NC	I		Not used
2	$\overline{\text{RDSRST}}$	O	C	Reset output for RDS IC
3	RDSSEL	O	C	Select output for RDS IC
4	AVSS	I		A/D coverter GND
5	$\overline{\text{RDSEN}}$	O	C	Enable output for RDS IC
6	RDSRDY	I		Ready input from RDS IC
7	AVREF1	I		D/A converter reference voltage
8	KYDT	I		Key data input
9	DPDT	O	C	Display data output
10	$\overline{\text{RST}}$	O	C	LSI reset output
11	RDSDI	I		Serial data input for RDS IC
12	RDSDO	O	C	Serial data output for RDS IC
13	$\overline{\text{RDSCK}}$	O	C	Serial clock output for RDS IC
14	XA0	O		Control signal distinguishing data from microcomputer
15	$\overline{\text{XSTB}}$	O	C	LSI strobe output
16	XSI	I		LSI data input
17	XSO	O	C	LSI data output
18	$\overline{\text{XSCK}}$	O	C	LSI clock output
19	CONT	O	C	Servo driver power supply control
20	LOAD	O	C	Loading motor LOAD control
21	EJET	O	C	Loading motor EJECT control
22	CD5VON	O	C	CD +5V control
23	NC			Not used
24	CDMUTE	O	C	CD mute output
25	$\overline{\text{TMUTE}}$	O	C	Tuner mute output
26	VDCONT	O	C	VD control input
27	FOK	I		FOK signal input
28	MIRR	I		Mirror detector input
29	LOCK	I		Spindle lock detector input
30	CLAMP	I		Disc clamp sense input
31	$\overline{\text{HOME}}$	I	C	Home position detector input
32	FECNT	O	C	FE output control pin
33	VSS			GND
34	VDSENS	I		VD over voltage sense input
35	VMC	O	C	Loading motor driver power supply
36	NC			Not used
37	$\overline{\text{ADENA}}$	O	N	A/D converter reference voltage output
38	NC			Not used
39	CDPW	O	N	CD power control
40	NC			Not used
41	SYSPW	O	C	System power supply control output
42	BLGT	O	C	LCD back light control output
43	VLCDPW	O	C	Power supply control output for LCD
44	$\overline{\text{SWVDD}}$	O	C	Key board unit power supply control output
45	PEE	O	C	Beep tone output
46	VDT	O	C	Data output for electronic volume
47	VST	O	C	Strobe pulse output for electronic volume
48	VCK	O	C	Clock output for electronic volume
49	PCL	O	C	Clock adjustment output
50	FM/$\overline{\text{AM}}$	O	C	FM/AM power select output
51	MONO	O	C	Forced mono output
52-55	NC			Not used
56	MUTE	O	C	Mute output
57	NC			Not used
58	NC			Not used
59	SD	I		SD input
60	$\overline{\text{RESET}}$	I		Reset input

Pin No.	Pin Name	I/O	Output Format	Function and Operation
61	NC			Not used
62	$\overline{\text{BSENS}}$	I		Back up power sense input
63	$\overline{\text{ASENS}}$	I		ACC power sense input
64	PDI	I		PLL data input
65	PDO	O	C	Data output for PLL IC
66	PCK	O	C	Serial clock output for PLL IC
67	PCE	O	C	Chip enable output for PLL IC
68	VDD			Power supply
69,70	X2,X1			Crystal oscillator connection pin
71	IC			Connect to GND
72	XT2			Not used
73	TESTIN	I		Test program start input
74	AVDD			Positive power supply terminal for analog circuit
75	AVREF0	I		A/D converter reference voltage
76	SL	I		SD level input from tuner
77	TEMP	I		Temperature detector
78	DINC	I		Disc insert sense input
79	EJTD	I		Disc eject position sense input
80	DSENS	I		Grille detach sense

*PD4483B

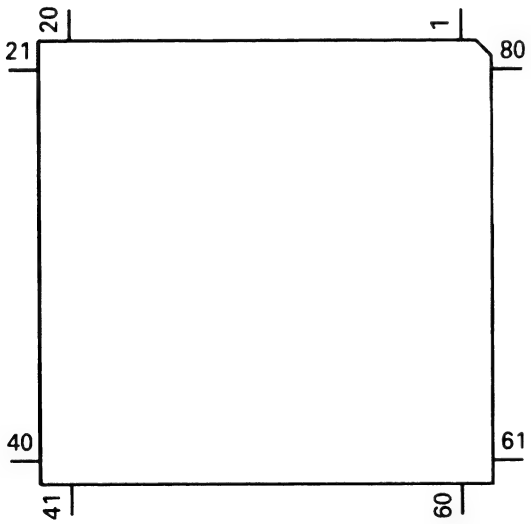

Output Format	Meaning
C	CMOS
N	N channel open drain

● **Pin Functions (PD6122A)**

Pin No.	Pin Name	I/O	Function and Operation
1	VSS		GND
2	X1		Crystal oscillator connection pin
3	X0		Crystal oscillator connection pin
4	RESET	I	Reset Input
5,6	MOD1,0	I	Model select input
7	DILMX	O	Function LED select output
8	KYDT	O	Key data output
9	DPDT	I	Display data input
10	REMIN	I	Remote control pulse input
11	SILMO	O	Illumination color select output
12	SILMG	O	Function LED select output
13–16	$\overline{KD4}$-$\overline{KD1}$	I	Key sense input
17–22	$\overline{KDT6}$-$\overline{1}$	O	Key strobe output
23	VDD		5V
24–34	NC		Not used
35–73	SEG38–0		LCD segment output
74–77	COM3–0	O	LCD common output
78–80	VLCD–V1		Power supply terminal

*PD6122A

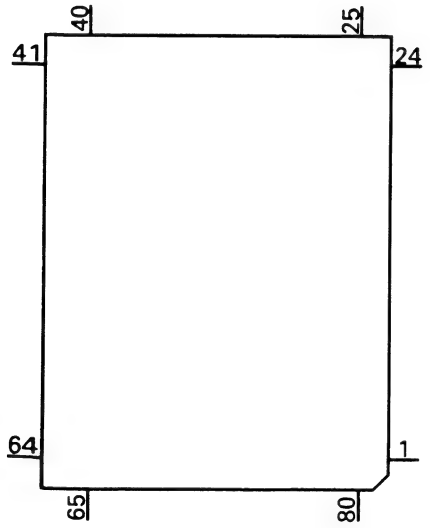

*RPM-678CBR

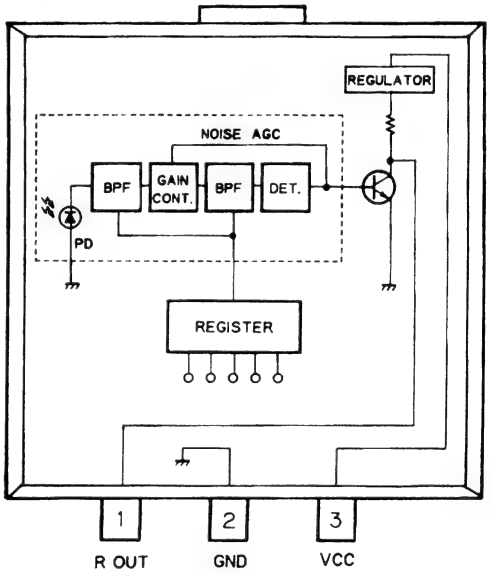

● Pin Functions(UPC2571GS)

Pin No.	Pin Name	I/O	Function and Operation
1	VCC		VCC
2	BP-	I	TE zero cross amplifier input
3	BPO	O	TE zero cross amplifier output
4	WC+		Not used
5	WC-		Not used
6	GND1		GND
7	QDH		Not used
8	QDO		Not used
9	A	I	A signal input
10	C	I	C signal input
11	B	I	B signal input
12	D	I	D signal input
13	E	I	E signal input
14	F	I	F signal input
15	PIN	I	APC amplifier input
16	LA	O	APC amplifier output
17	LAON		APC amplifier ON/OFF switching
18	REFI	I	Reference voltage input
19	REFO	O	Reference voltage output
20	GND2		GND
21	RF+	I	RF amplifier non-inverting input
22	RF-	I	RF amplifier inverting input
23	RFO	O	RF amplifier output
24	RFI		Not used
25	ENVB		Not used
26	ENBP		Not used
27	NC		Non connection
28	TE1O	O	Tracking error amplifier 1 output
29	TE2+	I	Tracking error amplifier 2 non-inverting input
30	TE2-	I	Tracking error amplifier 2 inverting input
31	TE2O	O	Tracking error amplifier 2 output
32	FE1+	I	Focus error amplifier 1 non-inverting input
33	FE1O	O	Focus error amplifier 1 output
34	FE2+	I	Focus error amplifier 2 non-inverting input
35	FE2-	I	Focus error amplifier 2 inverter input
36	FE2O	O	Focus error amplifier 2 output

UPC2571GS

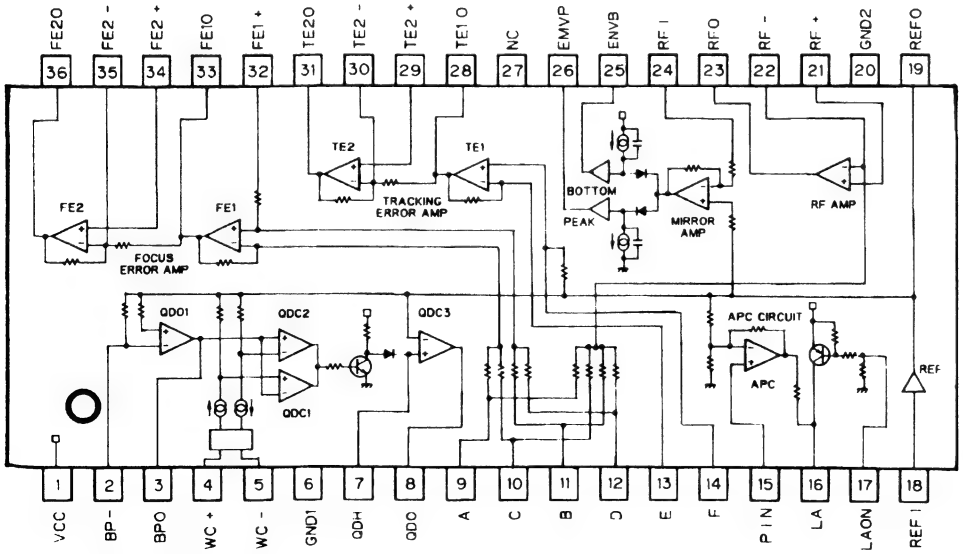

● **Pin Functions(UPD63700GF)**

Pin No.	Pin Name	I/O	Function and Operation
1	D.GND		Logic circuit GND
2	RFOK	O	RFOK detection signal output terminal
3	MIRR	O	MIRR detection signal output terminal
4	TBC	I	Tracking filter bank switching terminal
5	HOLD	I	Hold control signal input terminal
6	D.VDD		VDD for logic circuit
7	$\overline{RST}$	I	System reset
8	AO	I	Control signal distinguishing data from microcomputer
9	$\overline{STB}$	I	Signal latching serial data inside LSI
10	$\overline{SCK}$	I	Clock input terminal for serial data input and output
11	SO	O	Serial data and status signal output
12	SI	I	Serial data input
13	TM2	I	Double speed playback control terminal
14	D.GND		Logic circuit GND
15	TEST	I	Test terminal
16	STBY	I	Stand-by input terminal
17	CTLV	I	Control terminal for clock generation VCO used by digital PLL in double speed playback mode
18	POUT	O	Output terminal for phase comparison between EFM signal and bit clock
19	D.GND		Logic circuit GND
20	VCO	I	Inverter input
21	$\overline{VCO}$	O	Inverter output
22	D.VDD		VDD for logic circuit
23	PLCK	O	Bit clock monitor terminal
24	LOCK	O	"H" when synchronization signal and frame counter output coincide at EFM demodulator
25	WFCK	O	Signal issuring one-frame period by bit clock dividing signal
26	RFCK	O	Oscillation clock divider signal,output pin for signal giving 1-frame sync.
27	C4M	O	Output terminal for signal having four the frequency of LRCK
28	C16M	O	Oscillation clock output terminal
29	D.GND		Logic circuit GND
30	XTAL	I	Oscillation continuation terminal
31	$\overline{XTAL}$	O	Oscillation continuation terminal
32	D.VDD		VDD for logic circuit
33	SCKO	O	Clock output terminal for audio serial data
34	LRCK	O	Signal distinguishing between left and right channel DOUT terminal output
35	DOUT	O	Serial audio data output terminal
36	TX	O	Digital audio interface data output terminal
37	FLAG	O	Flag signal indicating that the current audio data output of incorrectable data
38	EMPH	O	Emphasis information output
39	WDCK	O	Output terminal for signal having double the frequency of LRCK
40	C2D3	O	Output terminal indicating C2 error correction status
41	SFSY	O	Signal indicating subcode one-frame synchronization
42	SBSY	O	Signal indicating head of subcode block
43	SBSO	O	Subcode data output terminal
44	SBCK	I	Subcode data read clock input terminal
45	D.GND		Logic circuit GND
46,47	C1D1,C1D2	O	Output terminal indicating C1 error correction status
48,49	C2D1,C2D2	O	Output terminal indicating C2 error correction status
50	T4	I	Selects between focus and tracking modulation mode
51	T5	I	Selects motor PWM output mode
52	T6	I	Sets focus PWM output mode
53	T7	I	Sets tracking PWM output mode
54	D.VDD		VDD for logic circuit
55	MRD	O	PWM negative output terminal for the spindle loop filter
56	MFD	O	PWM positive output terminal for the spindle loop filter
57	SRD	O	PWM negative output terminal for the thread loop filter
58	SFD	O	PWM positive output terminal for the thread loop filter

Pin No.	Pin Name	I/O	Function and Operation
59	D.GND		Logic circuit GND
60	TRD	O	PWM negative output terminal for the tracking loop filter
61	TFD	O	PWM positive output terminal for the tracking loop filter
62	FRD	O	PWM negative output terminal for the focus loop filter
63	FFD	O	PWM positive output terminal for the focus loop filter
64	D.VDD		VDD for logic circuit
65	OUTSEL	I	Sets PWM output mode for the motor system
66	TEC1	I	Tracking error input terminal
67	TEC0	I	Tracking error input terminal
68	A.VDD		VDD for analog circuit
69,70	VR2,VR1	I	A/D converter input
71	TE	I	Tracking error input terminal
72	FE	I	Focus error input terminal
73	RFB	I	RFB signal input terminal
74	RFP	I	RFP signal input terminal
75	A.GND		Analog circuit GND
76	REFOUT	O	A/D converter midpoint voltage output terminal inside LSI
77	RFI	I	RF signal input terminal for EFM comparator
78	ASI	I	Level comparing input for RF signal comparison
79	EFM	O	EFM signal output terminal
80	A.VDD		VDD for analog circuit

*UPD63700GF

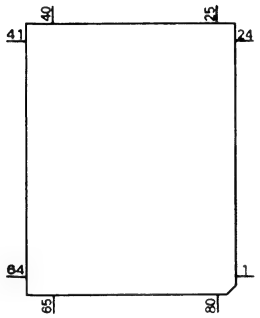

XRA6285FP

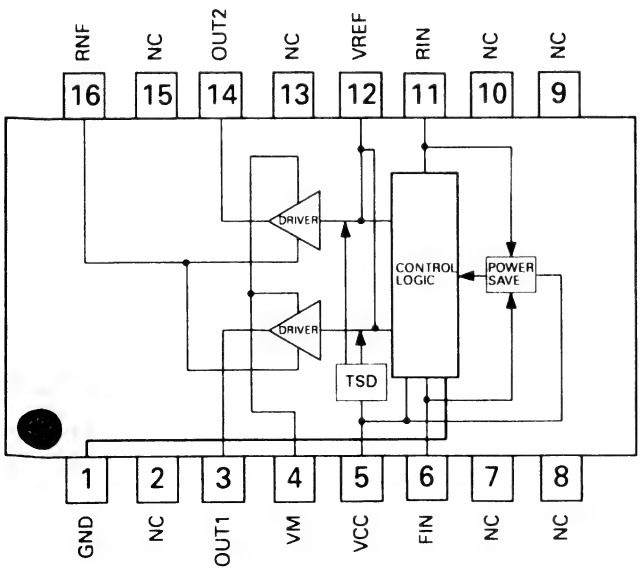

PQ05TZ51

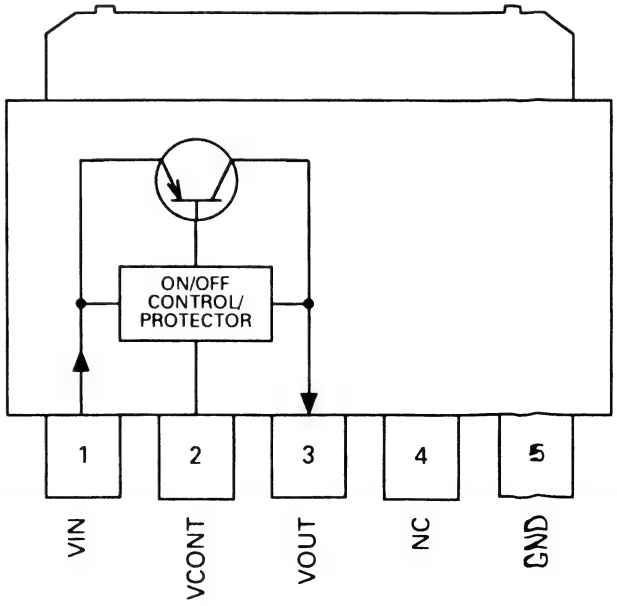

*TC9268F

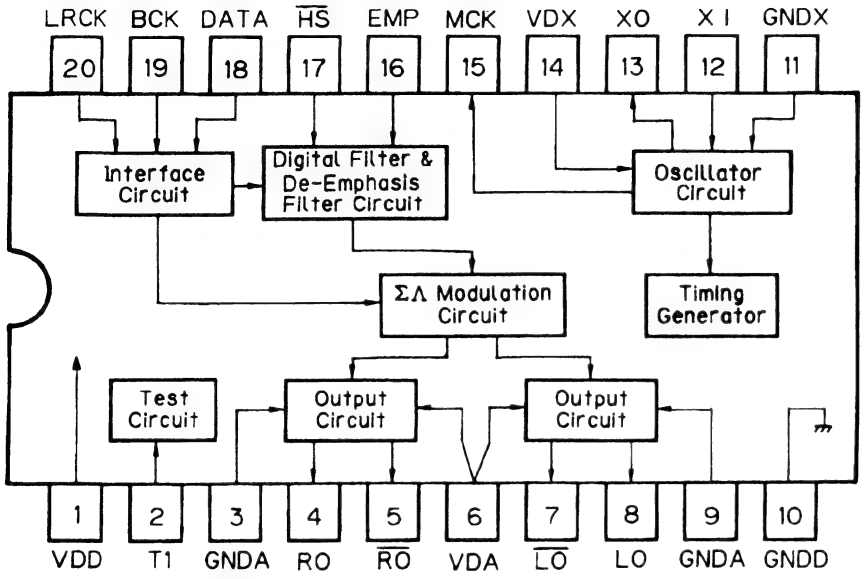

TA2063F

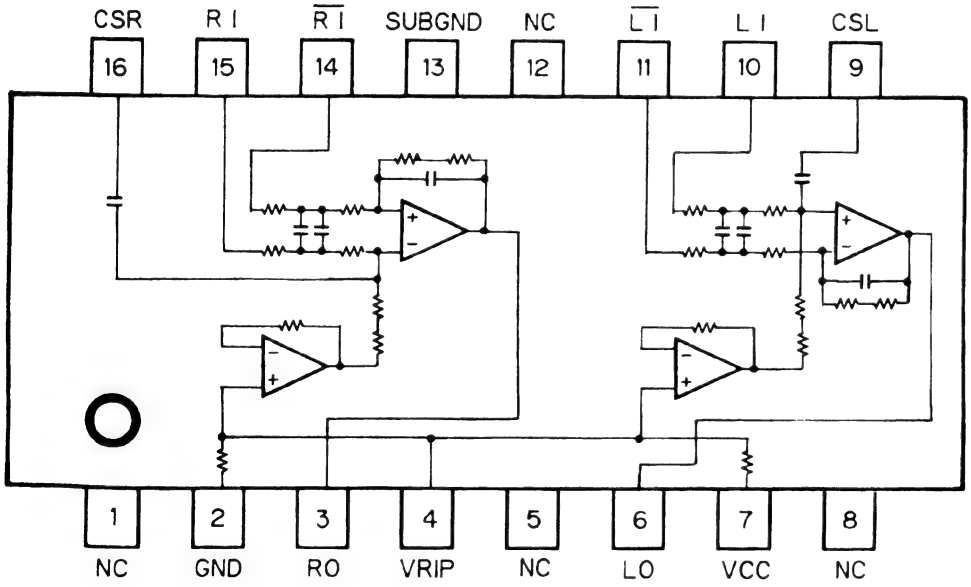

4. ADJUSTMENT

4.1 CD PLAYER SECTION

1)Precautions

· This unit uses a single power supply (+5V) for the regulator. The signal reference potential, therefore, is connected to REFO(approx. 2.5V) instead of GND.
If REFO and GND are connected to each other by mistake during adjustments,not only will it be impossible to measure the potential correctly,but the servo will malfunction and a severe shock will be applied to the pick-up. To avoid this,take special note of the following.
Do not connect the negative probe of the measuring equipment to REFO and GND together. It is especially important not to connect the channel 1 negative probe of the oscilloscope to REFO with the channel 2 negative probe connected to GND.
Since the frame of the measuring instrument is usually at the same potential as the negative probe,change the frame of the measuring instrument to floating status.
If by accident REFO comes in contact with GND,immediately switch the regulator or power OFF.

· Always make sure the regulator is OFF when connecting and disconnecting the various filters and wiring required for measurements.

· Before proceeding to further adjustments and measurements after switching regulator ON,let the player run for about one minute to allow the circuits to stabilize.

· Since the protective systems in the unit s software are rendered inoperative in test mode,be very careful to avoid mechanical and /or electrical shocks to the system when making adjustment.

· Test mode starting procedure
Switch ACC,back-up ON while pressing the **4** and **6** keys together.

· Test mode cancellation
Switch ACC,back-up OFF.

· Disc detection during loading and eject operations is performed by means of a photo transistor in this unit.Consequently,if the inside of the unit is exposed to a strong light source when the outer casing is removed for repairs or adjustment,the following malfunctions may occur.
*During PLAY, even if the eject button is pressed,the disc will not be ejected and the unit will remain in the PLAY mode.
*The unit will not load a disc.
When the unit malfunctions this way,either re-position the light source,move the unit or cover the photo transistor.

· When loading and unloading discs during adjustment procedures,always wait for the disc to be properly clamped or ejected before pressing another key. Otherwise, there is a risk of the actuator being destroyed.

· Turn power off when pressing the button **TR+** or the button **TR-** key for focus search in the test mode. (Or else lens may stick and the actuator may be damaged.)

· SINGLE/4TRK/10TRK/32TRK will continue to operate even after the key is released.Tracking is closed the moment C-MOVE is released.

· JUMP MODE resets to SINGLE as soon as power is switched off.

● Flow Chart

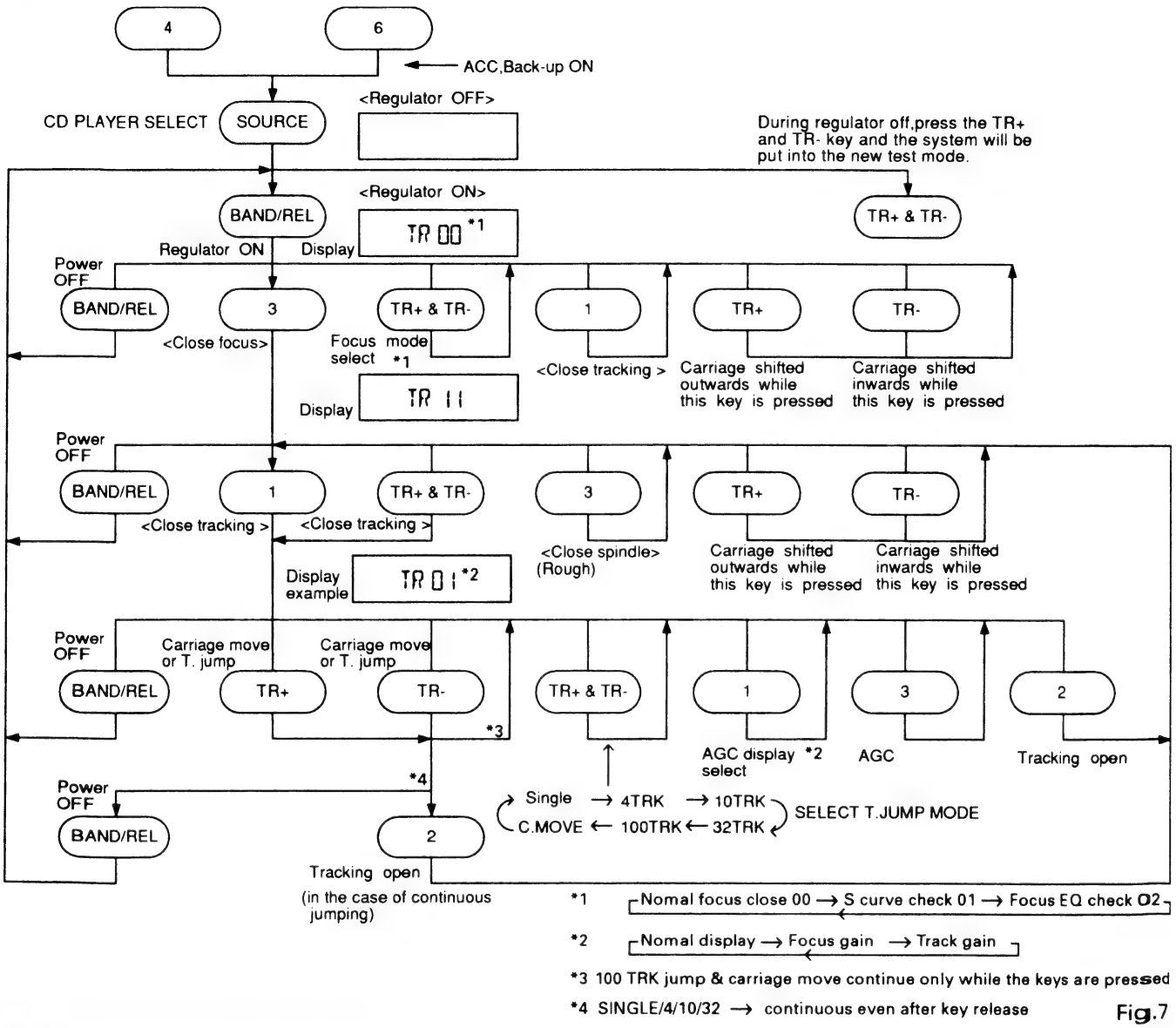

Fig.7

●Measuring Equipment and Jigs

Adjustment	Measuring equipment & jigs
1 Tracking Error Offset Adjustment 1	DC V Meter
2 Grating Check / Adjustment 1	Oscilloscope, ABEX TCD-784, L.P.F., Clock Driver
3 Grating Adjustment 2	Oscilloscope, Grating Adjustment Filter (B.P.F.), mV Meter, ABEX TCD-784, L.P.F., Clock Driver
4 Tracking Balance Adjustment 1	Oscilloscope, Low-pass Filter, ABEX TCD-784
5 Focus Bias Adjustment	Oscilloscope, ABEX TCD-784
6 RFO Offset Adjustment	Oscilloscope, ABEX TCD-784
7 Tracking Error Offset Adjustment 2	DC V Meter
8 Tracking Balance Adjustment 2	Oscilloscope, Low-pass Filter, ABEX TCD-784

Adjustment Point

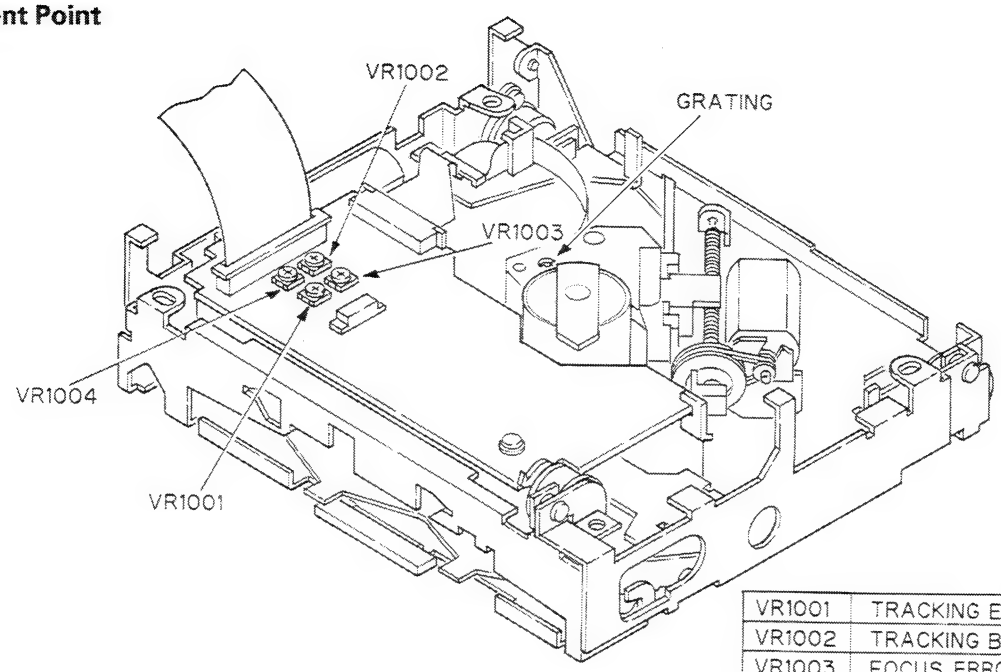

VR1001	TRACKING ERROR OFFSET
VR1002	TRACKING BALANCE
VR1003	FOCUS ERROR BIAS
VR1004	RFO OFFSET

Fig.8

Test Point

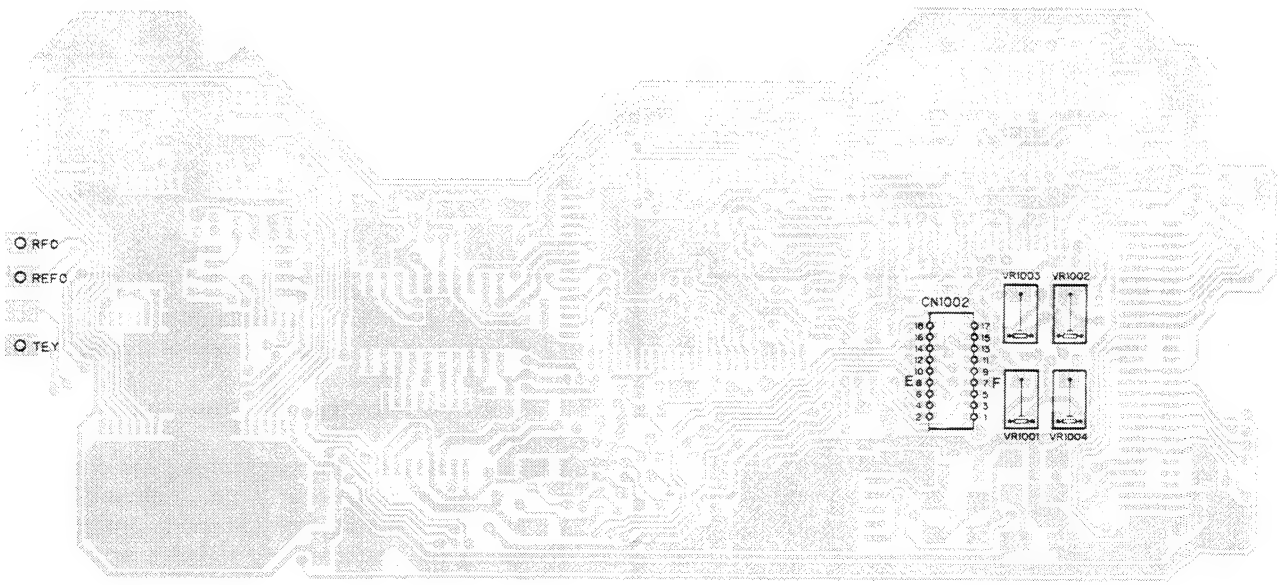

Fig.9

1 Tracking Error Offset Adjustment 1

·**Purpose** :
To adjust the offset of the tracking pre-amp to zero

·**Symptoms of Mal-adjustment** :
Track search NG, Carriage runaway, Poor playability

·**Measuring Equipment / Jig**	·DC V Meter
·**Measuring Point**	·TEY
·**Test Disc , Mode**	·No disc, TEST MODE
·**Adjustment Point**	·VR1001(TE OFFSET VR)

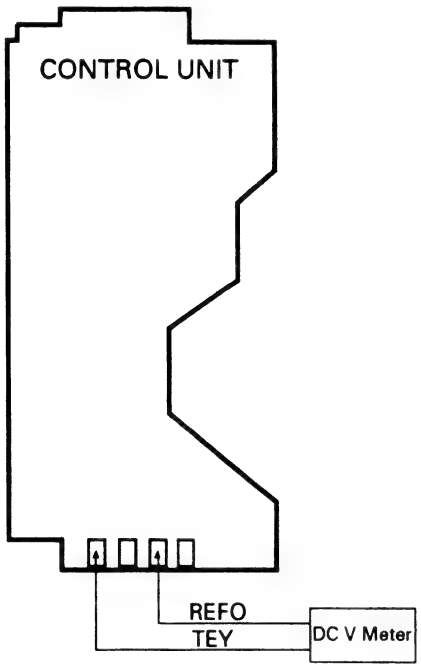

Adjustment Procedure
1.Switch the regulator on.
2.Using VR1001, adjust TEY to 0 ± 25mV w.r.t. REFO.

2 Grating Check / Adjustment 1

·**Purpose** :
To check that the PU grating is correctly aligned after the PU unit has been replaced

·**Symptoms of Mal-adjustment** :
Unable to play disc, track skip during search, search NG

·**Measuring Equipment / Jig**	·Oscilloscope, L.P.F., Clock Driver
·**Measuring Point**	·E, F
·**Test Disc , Mode**	·ABEX TCD-784, TEST MODE
·**Adjustment Point**	·Grating hole

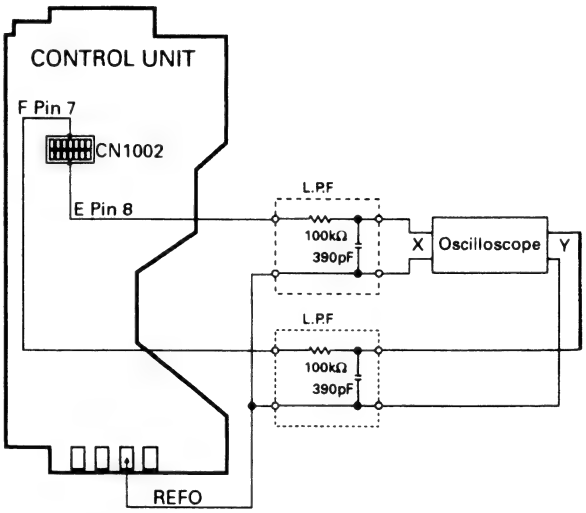

Adjustment Procedure
1.Load disc and switch regulator on.
2.Position the PU in the center of the disc using the **TR+** & **TR-** keys.
3.Press key **3** to close focus and once more to close spindle.
4.Refering to the photographs given check that the grating is within ±45°. If not, it should be possible to make a fine adjustment to the grating by **slowly** tuning the grating screw. If, however during the adjustment the lissajous figure is seen to "FLIP" then the null point must be found and the adjustment made from there(see next section).

Lissajous figure (AC input)
Horizontal axis E 10mV/div.
Vertical axis F 10mV/div.

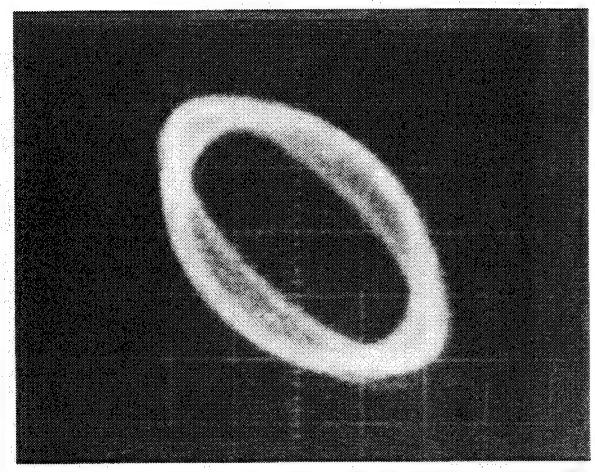

60°=NG

Waveform 1

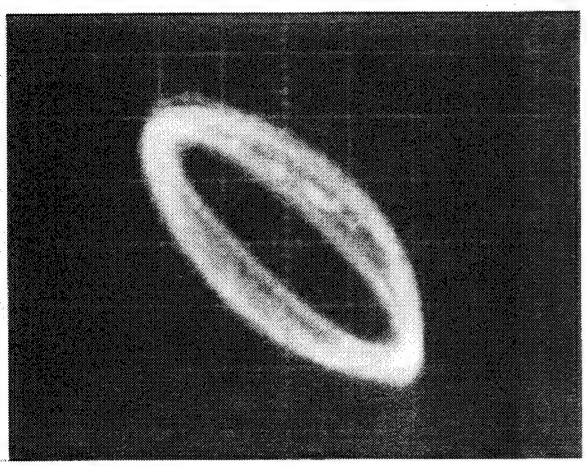

45°=OK
(Limit)

Waveform 2

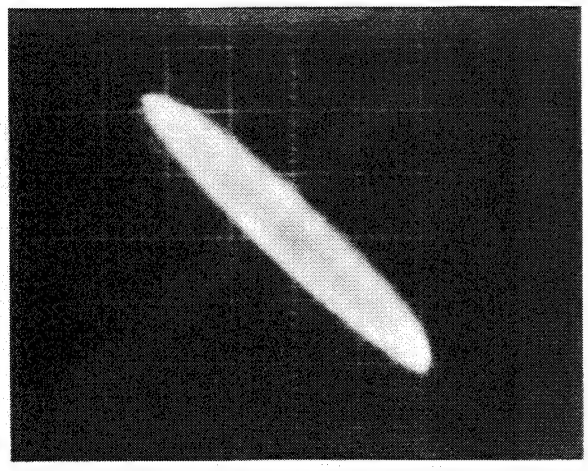

0°=BEST
(Doesn't become a single line due to eccentricity)

Waveform 3

3 Grating Adjustment 2

- **Purpose :**
  This needs to be done if the previous adjustment was unsuccessful
- **Symptoms of Mal-adjustment :**
  Unable to play disc, track skipping, track search NG

Measuring Equipment / Jig	Oscilloscope, Grating Adjustment filter (BPF), mV Meter, L.P.F., Clock Driver
Measuring Point	TEY, E, F
Test Disc , Mode	ABEX TCD-784, TEST MODE
Adjustment Point	Grating hole

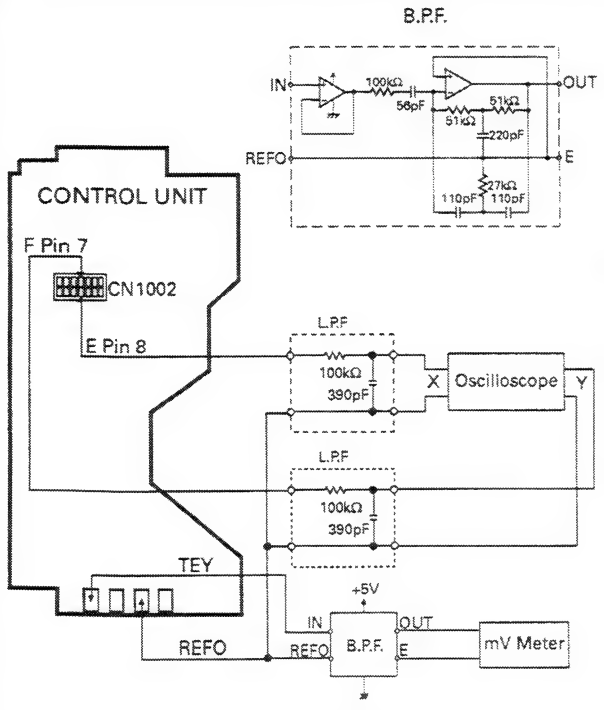

Adjustment Procedure

1. Load disc and switch regulator on.
2. Position PU unit in the center of the disc using the **TR+** & **TR-** keys.
3. Press key **3** to close focus and press once more to close spindle.
4. While monitoring the output of the BPF connected to TEY, slowly turn the grating screw. The output voltage should pass through many minimums; search for the minimum which is clearly smaller than the rest - this is the "null point", where the E & F sub-beams are lined up with the tracks on the disc.
5. From this null point, turn the grating screw clockwise (as seen from the underside of the PU unit) until the lissajous waveform is a single line (or close as possible) as shown in the photograph.

Lissajous figure (AC input)
Horizontal axis E 10mV/div.
Vertical axis F 10mV/div.

Null Point=180°

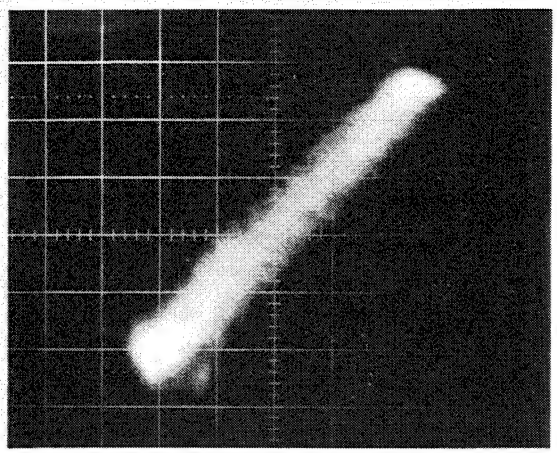

Waveform 4

"Rough" adjustment=90°

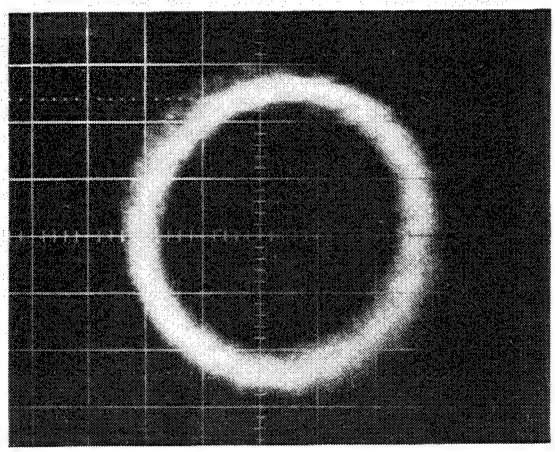

Waveform 5

Final adjustment=0°

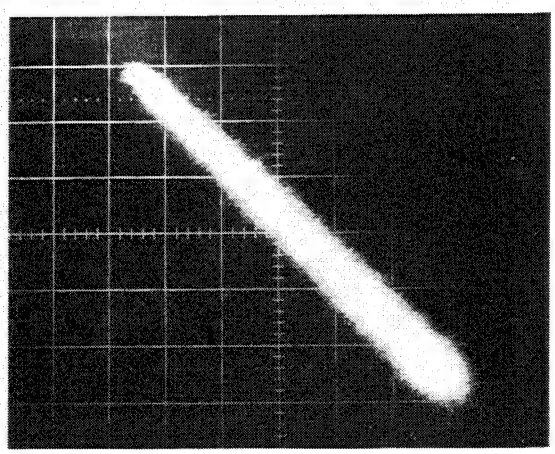

Waveform 6

4 Tracking Balance Adjustment 1

- **Purpose :**
  To equate the sensitivity of the F channel to that of the E channel
- **Symptoms of Mal-adjustment :**
  Track search NG, Poor playability carriage runaway

· **Measuring Equipment / Jig**	· Oscilloscope, L.P.F.
· **Measuring Point**	· TEY
· **Test Disc , Mode**	· ABEX TCD-784, TEST MODE
· **Adjustment Point**	· VR1002 (T.BAL VR)

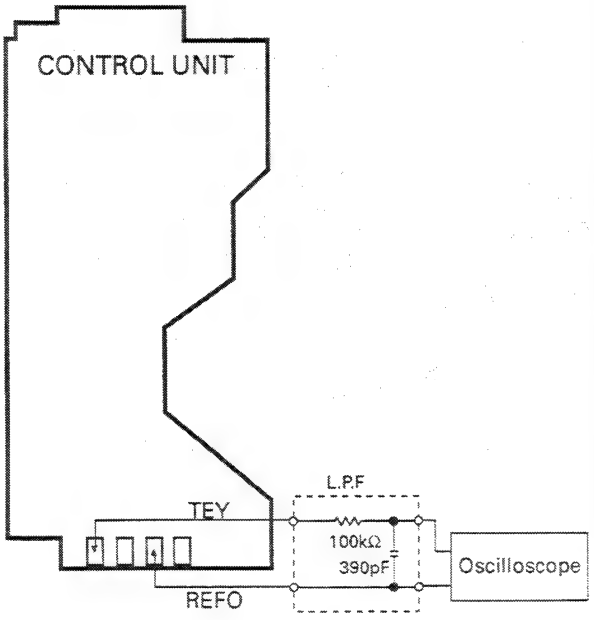

Adjustment Procedure

1. Load Disc and switch the regulator on.
2. Position the PU unit in the center of the disc using the **TR+** & **TR-** keys.
3. Close focus by pressing key **3**.
4. Observing the TEY waveform on the oscilloscope, adjust VR1002 until the positive and negative halves have the same amplitude (see waveform 7–9).

Check

After adjustment the TEY waveform should have an amplitude of 1.5±0.65 Vpp (ABEX-784)
(Providing focus bias is OK)

DC Mode
0.5V/div.
5ms/div.

+5% NG

REFO →

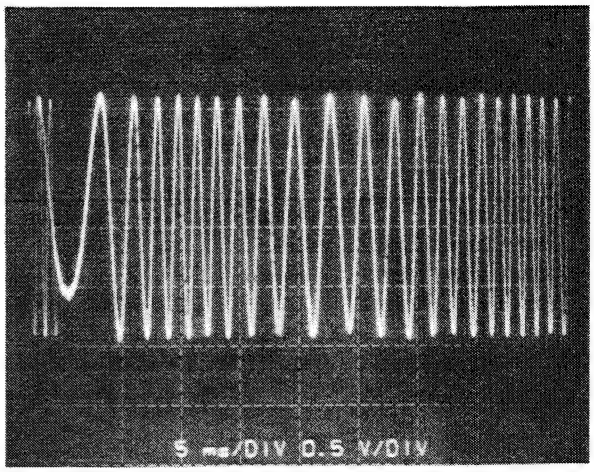

Waveform 7

±0% OK

REFO →

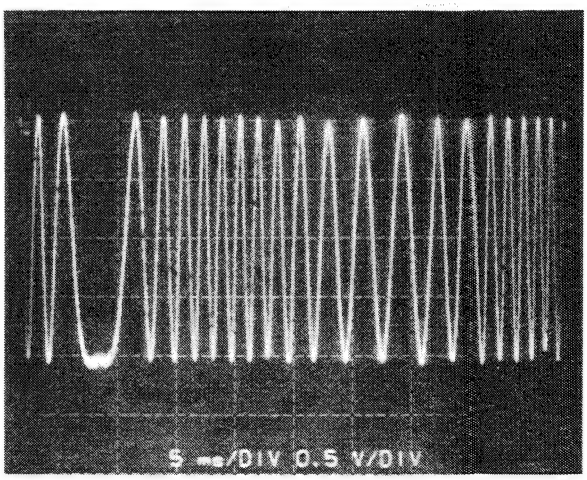

Waveform 8

−5% NG

REFO →

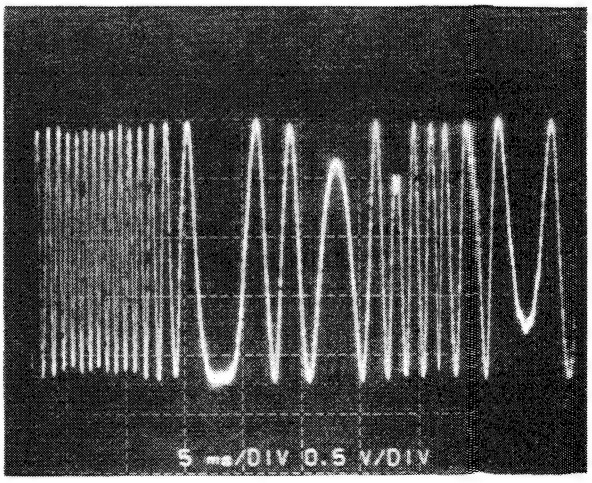

Waveform 9

5 Focus Bias Adjustment

·Purpose :
To adjust the focus servo reference so that the RF waveform is an optimum.
·Symptoms of Mal-adjustment :
Difficulty in closing focus, poor playability.

·Measuring Equipment / Jig	·Oscilloscope
·Measuring Point	·RFO
·Test Disc , Mode	·ABEX TCD-784, NORMAL MODE
·Adjustment Point	·VR1003 (FE BIAS VR)

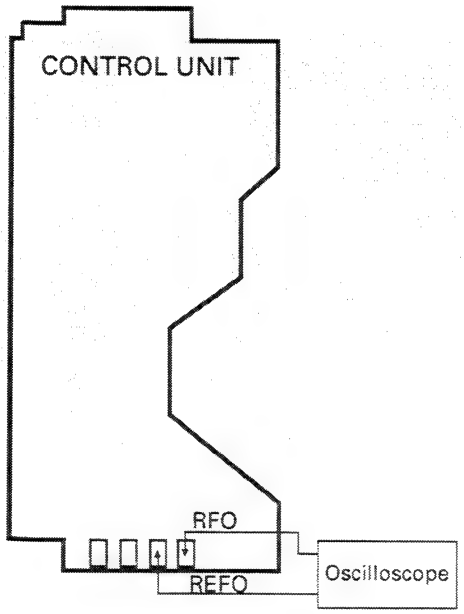

Adjustment Procedure
1) Play track number 18.
2) Adjust VR1003 so that the RFO waveform amplitude is a maximum and eye pattern is optimum.

Check
After adjustment the RFO waveform should have an amplitude of 1.7±0.65 Vpp (ABEX-784)

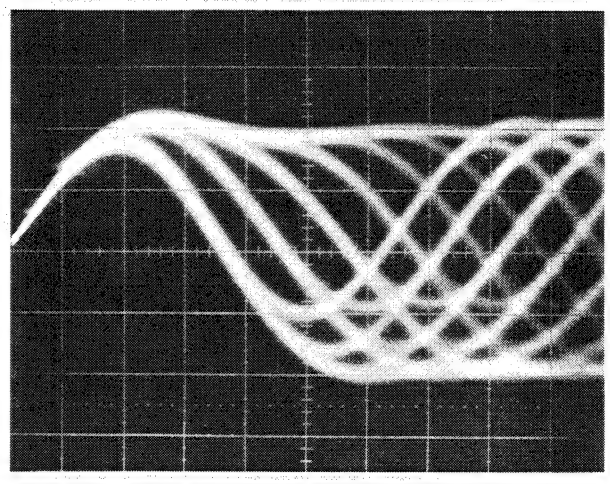

OK

Waveform 10

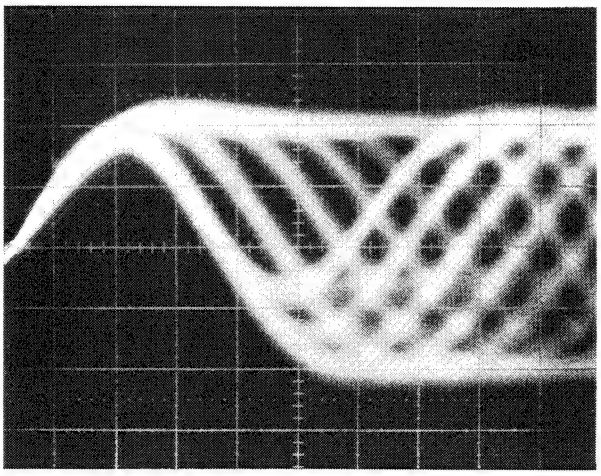

NG

AC Mode Before adjustment Waveform 11

6 RFO Offset Adjustment

·Purpose
To adjust the RFO waveform offset to an optimum.
·Symptoms of Mal-adjustment
Difficulty in closing focus, poor playability.

·Measuring Equipment / Jig	·Oscilloscope
·Measuring Point	·RFO
·Test Disc , Mode	·ABEX TCD-784, NORMAL MODE
·Adjustment Point	·VR1004 (RFO OFFSET VR)

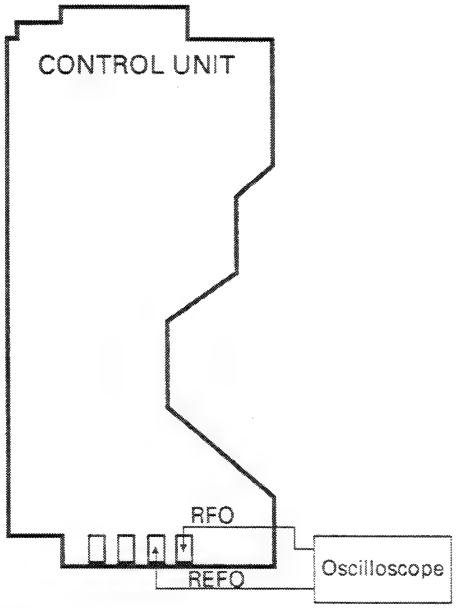

Adjustment Procedure
1) Play track number 18.
2) Adjust VR1004 so that the peak value of the upper envelope of the RFO waveform is at +1.1VDC w.r.t. REFO.(See waveform 12–14)

DC Mode
0.2V/div.
0.5µs/div.

+100mV NG

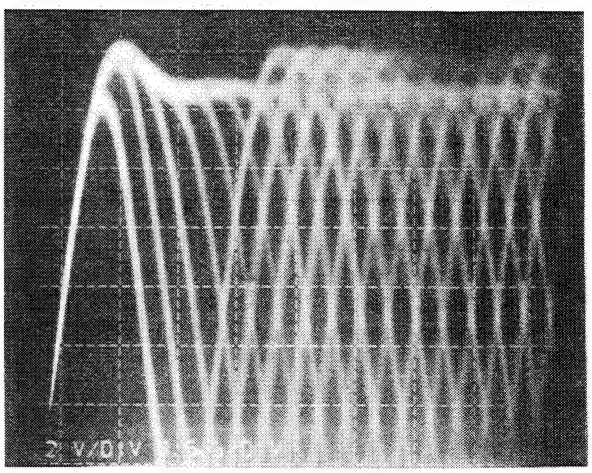

REFO →

Waveform 12

OK

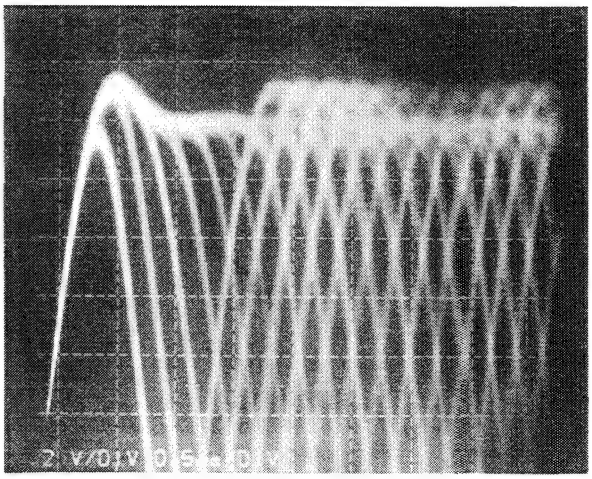

1.1V

REFO →

Waveform 13

−100mV NG

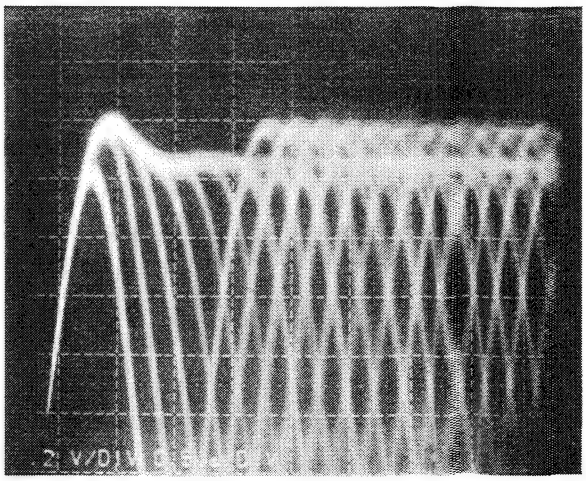

REFO →

Waveform 14

7 Tracking Error Offset Adjustment 2

·**Purpose :**
To check the offset of the tracking pre-amp is zero and adjust if necessary.
·**Symptoms of Mal-adjustment :**
Track search NG, Carriage runaway, Poor playability

·**Measuring Equipment / Jig**	·DC V Meter
·**Measuring Point**	·TEY
·**Test Disc , Mode**	·No disc, TEST MODE
·**Adjustment Point**	·VR1001(TE OFFSET VR)

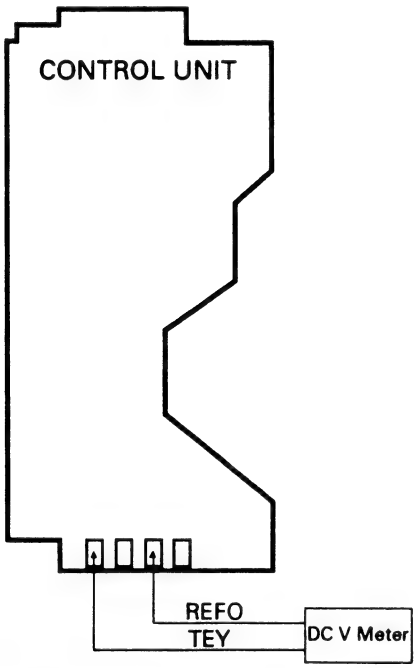

Adjustment Procedure
1.Switch the regulator on.
2.Using VR1001, adjust TEY to 0 ± 25mV w.r.t. REFO.

8 Tracking Balance Adjustment 2

·**Purpose :**
To equate the sensitivity of the F channel to that of the E channel.This needs only be done if the TE OFF-SET volume was re-adjusted in the previous step
·**Symptoms of Mal-adjustment:**
Track search NG,Poor playability, carriage runaway

·**Measuring Equipment / Jig**	·Oscilloscope, L.P.F.
·**Measuring Point**	·TEY
·**Test Disc , Mode**	·ABEX TCD-784, TEST MODE
·**Adjustment Point**	·VR1002 (T.BAL VR)

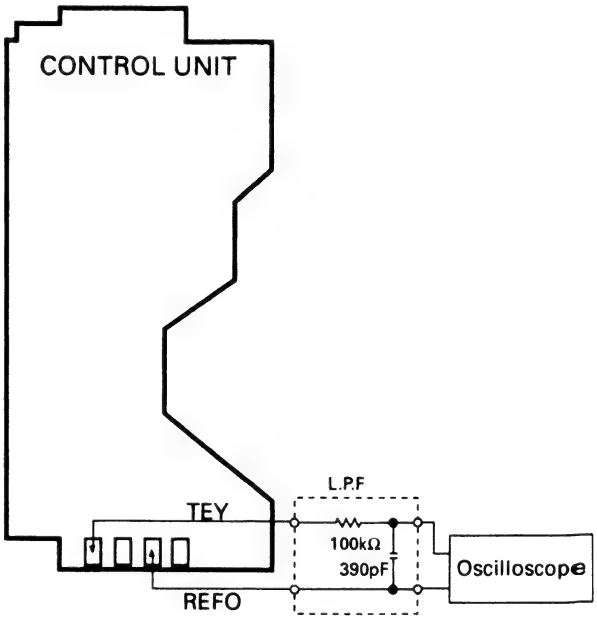

Adjustment Procedure
1.Load Disc and switch the regulator on.
2.Position the PU unit in the center of the disc using the **TR+** & **TR-** keys.
3.Close focus by pressing key **3**.
4.Observing the TEY waveform on the oscilloscope, adjust VR1002 until the positive and negative halves have the same amplitude (See waveform 7–9).
Check
After adjustment the TEY waveform should have an amplitude of 1.5±0.65 Vpp (ABEX-784)

4.2 TUNER SECTION

● **Connection Diagram**

NOTE:
Select C1 so that total capacity of 80pF is attained from the direction of the receiver jack.
Z: Output impedance of SSG.

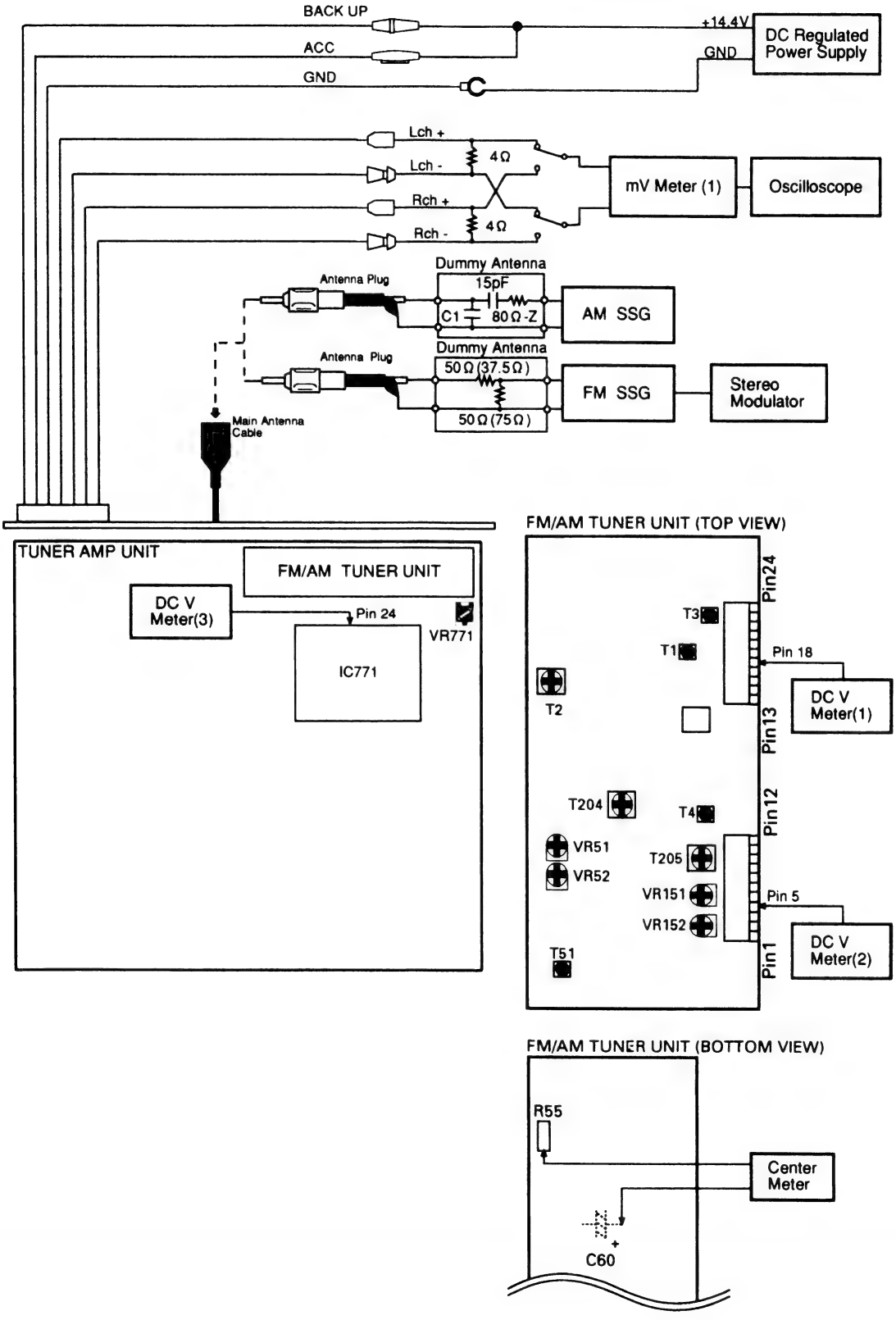

Fig.10

MW/LW ADJUSTMENT

	No.	AM SSG(400Hz,30%) Frequency(kHz)	Level(dB μV)	Displayed Frequency(kHz)	Adjustment Point	Adjustment Method (Switch Position)
IF	1	999	20	999	T204,T205,	mV Meter(1) : Maximum

FM ADJUSTMENT

Modulation M:MONO MOD., 400Hz 100%(75kHz Dev.)
S:STEREO MOD., 1kHz, L or R=90%, Pilot=10%(67.5kHz+7.5kHz Dev.)

NOTE:Before proceeding to further adjustments after switching power ON, let the tuner run for ten minutes to allow the circuits to stabilize.

	No.	FM SSG Frequency(MHz)		Level(dBf)	Displayed Frequency(MHz)	Adjustment Point	Adjustment Method (Switch Position)
TUN Volt	1	108.0	M	65	108.0	T4	DC V Meter(1) : 6.5V±0.1V
IF	1	98.1	M	65	98.1	T51	Center Meter:0
ANT,RF	1	98.1	M	10	98.1	T1,T3	mV Meter(1) : Maximum
IFT	1	98.1	M	10	98.1	T2	mV Meter(1) : Maximum (STEREO MODE)
Soft Mute	1	98.1	M	65	98.1		mV Meter(1) : A (STEREO MODE)
	2	98.1	M	15	98.1	VR52	mV Meter(1) : A-3dB
MPX	1	98.1	S	65	98.1	VR152	mV Meter(1) : Separation Maximum
ARC	1	98.1	S	40	98.1	VR151	mV Meter(1) : Separation 5dB
SD	1	98.1	S	22	98.1	VR51	DC V Meter(2) : Approx. 5V (SEEK:ON)

FM SL ADJUSTMENT(DEH-605RDS)

Modulation MONO MOD., 400Hz 100%(75kHz Dev.)

No.	FM SSG Frequency(MHz)	Level(dBf)	Displayed Frequency(MHz)	Adjustment Point	Adjustment Method (Switch Position)
1	106.1	52	106.1	VR771	DC V Meter(3) : 2.25V±0.05V

5. ERROR NUMBERS AND NEW TEST MODE

● Error Number Indication

If the CD should fail to operate or if an error has taken place during operation the player will enter into the error mode, and the cause of the error will be numerically indicated.
This is aimed at assisting in analysis or repair.

(1) Basic Means of Display

·With ERROR indicated in "MODE" on IP-BUS Display date, an error code is transmitted by the use of MIN and SEC. The MIN and SEC data will be identical.

·Examples of Display E-XX

(2) Error Codes

Error Code	Classification	Description	Cause/Detail
10	ELECTRIC	Carriage home failure	Carriage doesn't move to or from the innermost position →Home switch failed and/or carriage immobile
11	ELECTRIC	Focus failure	Focus failed →Defects, disc upside-down, severe vibration
12	ELECTRIC	SETUP failure Subcode failure	Spindle failed to lock or subcode unreadable →Spindle defective, defect, severe vibration
14	ELECTRIC	Mirror failure	Unrecorded CD-R The disc is upside-down, defects, vibration
17	ELECTRIC	Set up failure	AGC protect failed →Defects, disc upside-down, severe vibration
30	ELECTRIC	Search time out	Failed to reach target address →Carriage/tracking defective and/or defects
A0	SYSTEM	Power failure	Power overvoltage or short circuit detected →Switching transistor defective and/or power abnormal

"defects" means scratches, dirt etc an the surface of the disc.

● New Test Mode(aging operation and setup analysis)

The single CD player plays in normal mode. After being set up, it will display FOK (focus), LOCK (spindle), subcode, sound skip, protection against a mechanical error or the like, occurrence of an error, cause and time of an expiry, if any, (and disk number)
During the setup,the CD software operation status (internal RAM and C-point)is displayed.

(1) How to enter NEW TEST Mode

See the test mode flow chart Page 1-24.

(2) Relations of keys between TEST and NEW TEST Modes

Keys	Test Mode		New Test Mode	
	Regulator OFF	Regulator ON	PLAY in progress	Error Occurred, Protection Activated
BAND/REL	Regulator ON	Regulator OFF	—	Time of occurrence/ cause of error select
TR+	—	FWD-Kick	TR+	—
TR-	—	REV-Kick	TR-	—
1	—	Tracking close	PAUSE	—
2	—	Tracking open	REPEAT	—
3	—	Focus close	RANDOM	—
TR+ & TR-	To New Test Mode	Focus Mode Select	AUTO/MANU	TRACK No./ time of occurrence select

Operations,such as EJECT, CD ON/OFF, etc. are performed normally

(3) Error Cause (Error Number) Code

Error Code	Classification	Mode	Description	Cause/Detail	
40	ELECTRIC	PLAY	FOK=L	Put out of focus	Scratch, Stain, Vibration, Servo defect, etc...
41	ELECTRIC	PLAY	LOCK=L 150ms	Spindle unlock	
42	ELECTRIC	PLAY	Subcode unacceptable 500ms	Failed to read subcode	
43	ELECTRIC	PLAY	Sound skipped	Last address memory operated	

(4) Indicating an Operation Status During Setup

Status No.	Description	Protection operation
01	Carriage home mode started	None
02	Carriage moving inwards	10-second time out, Home switch failed
03	Carriage moving outwards	10-second time out, Home switch failed
05	Carriage moving outwards	None
11	Setup started	None
12	Spindle turn/Focus search started	None
13	Waiting for focus closure (XSI=L)	Failure to close focus
10,14	Waiting for focus closure (FOK=H)	Failure to close focus
15,16,17	Focus closed,Tracking open	Focus disrupted
18	During focus AGC Subcode waiting	Focus disrupted
19	During tracking AGC	Disrupted focus
20	Waiting for MIRR ,LOCK or subcode read Carriage closed, SPINDLE=ADAPTIVE	Focus disrupted, MIRR NG, Failure to lock, failed to read subcode

(5) Example of Display.

·SET UP in progress

8 digits

TNo.	Min	Sec
11	11	11

4 digits(Auto)

TNo.
11

4 digits(Manual)

Min	Sec
11	11

·Operation (PLAY, SEARCH, etc.) in progress perfectly identical with that in the normal mode.

·Protection/Error upon occurrence(4 digits display)

(a) Error number indicated

E–xx

Select the display with the BAND/REL key.

(b) Track number indicated

TNo.
10

(c) Absolute time indicated

Select the display with the TR+ and TR- keys.

Min Sec
40 05

·Protection/Error upon occurrence(8 digits display)

(a) Error number indicated

ERROR–xx

Select the display with the BAND/REL key.

(b) Track number and
absolute time indicated

TNo.	Min	Sec
10	40	05

6. EXPLODED VIEW PARTS LIST

● **Chassis(Exploded View:Page 2-9)**

NOTES:

● Parts marked by "✱"are generally unavailable because they are not in our Master Spare Parts List.

● Parts marked by "◉"are not always kept in stock. Their delivery time may be longer than usual or they may be unavailable.

● **Parts List(DEH-605RDS)**

Mark	No.	Description	Part No.
	1	Screw	BSZ26P050FMC
	2	Screw	BSZ26P080FMC
	3	Screw	PSS26P060FZK
	4	Screw	BSZ30P060FMC
	5	Screw	BSZ30P120FMC
	6	Cord Assy	CDE4142
	7	Cap	CNS1472
	8	Resistor	RS1/2P102JL
	9	Screw	CBA1284
	10	Handle	CNC4947
	11	Bush	CNV1009
	12	Case	CNB1817
	13	Holder	CNC3850
	14	Holder	CNC4946
	15	Insulator	CNM3726
	16	P.C.Board	CNP3534
	17	Case	CNS2269
	18	Cushion	CNM3074
	19	Cap	CNV2680
	20	Holder	CNV3620
	21	Chassis Unit	CXA5925
	22	CD Mechanism Module	CXK2810
	23	Tuner Amp Unit	CWX1648
	24	Screw	BSZ26P120FMC
	25	Cord	CDE4136
	26	Antenna Cable	CDH1146
	27	Plug(CN951)	CKM1139
	28	Plug(CN851)	CKS1238
	29	Connector(CN601)	CKS1529
	30	Connector(CN651)	CKS1546
	31	Holder	CNC4881
	32	Holder	CNC4882
	33	Bracket	CNC4940
	34	Holder	CNC5013
	35	Bracket	CNC5015
	36	Insulator	CNM3825
	37	Heat Sink	CNR1307
	38	Spacer	CNM3343
	39	IC(IC551)	PA3029A
	40	Screw	BSZ30P060FMC
	41	Bracket	CNC5014

Mark	No.	Description	Part No.
	42	FM/AM Tuner Unit	CWE1313
	43	Antenna Jack	CKX1043
	44	Holder	CNC4880
	45	Detach Grille Assy	CXA5860
	46	Screw	BUZ20P100FZK
	47	Button	CAC4040
	48	Button	CAC4041
	49	Button	CAC4042
	50	Button	CAC3741
	51	Button	CAC3742
	52	Button	CAC4039
	53	Button	CAC3744
	54	Grille	CNS2817
	55	Cover	CNS2818
	56	Key Board Unit	CWX1661
	57	LCD	CAW1228
	58	Holder	CNC5009
	59	Lens	CNV3671
	60	Rubber	CNV3672
	61	Connector	CNV3673
	62	Rubber	CNV3675
	63	Spacer	CNM4042
	64	Plug	CKS2402
	65	Panel Assy	CXA5875
	66	Screw	BPZ20P060FMC
	67	Spring	CBH1484
	68	Socket	CKS2782
	69	Holder	CNC4943
	70	Holder	CNC4944
	71	P.C.Board	CNP3532
	72	Arm	CNV3696
	73	Arm	CNV3697
	74	Panel Unit	CXA5913
	75	Screw	PMS20P030FZK
	76	Detach Mechanism Unit	CXA5188
	77	Washer	CBF1039
	78	Spring	CBH1484
	79	Arm	CNV3292
	80	Arm	CNV3293
	81	Holder Unit	CXA5124
	82	IC(IC971)	PA2023A
	83-90	·····	

● **The DEH-505SDK, DEH-505, DEH-405SDK and DEH-405 Parts Lists enumerate the parts which differ from those enumerated in the DEH-605RDS Parts List only. The parts other than those enumerated in the former are identical with those in the latter, to which you are requested to refer, accordingly. The DEH-605RDS Parts List is given on page 1-38.**

Mark No.	Description	DEH-605RDS	DEH-505SDK	DEH-505	DEH-405SDK	DEH-405
6	Cord Assy	CDE4142	CDE4141	CDE4142	CDE4141	CDE4142
19	Cap	CNV2680	·····	·····	CNV2680	CNV2680
21	Chassis Unit	CXA5925	CXA5933	CXA5934	CXA5935	CXA5934
23	Tuner Amp Unit	CWX1648	CWX1649	CWX1651	CWX1650	CWX1652
25	Cord	CDE4136	·····	·····	CDE4136	CDE4136
28	Plug(CN851)	CKS1238	·····	·····	CKS1238	CKS1238
29	Connector(CN601)	CKS1529	CKS1534	CKS1534	CKS1534	CKS1534
31	Holder	CNC4881	CNC4881	·····	CNC4881	·····
32	Holder	CNC4882	CNC4882	·····	CNC4882	·····
35	Bracket	CNC5015	CNC5016	CNC5016	CNC5015	CNC5015
36	Insulator	CNM3825	CNM3825	·····	CNM3825	·····
42	FM/AM Tuner Unit	CWE1313	CWE1311	CWE1311	CWE1311	CWE1311
45	Detach Grille Assy	CXA5860	CXA5861	CXA5866	CXA5865	CXA5867
52	Button	CAC4039	·····	·····	·····	·····
54	Grille	CNS2817	·····	·····	CNS2835	CNS2837
	Grille Unit	·····	CXA5921	CXA5922	·····	·····
56	Key Board Unit	CWX1661	CWX1662	CWX1662	CWX1664	CWX1664
57	LCD	CAW1228	CAW1229	CAW1229	CAW1229	CAW1229
58	Holder	CNC5009	CNC5010	CNC5010	CNC5010	CNC5010
65	Panel Assy	CXA5875	CXA5876	CXA5876	CXA5876	CXA5876
68	Socket	CKS2782	CKS2783	CKS2783	CKS2783	CKS2783
71	P.C.Board	CNP3532	CNP3526	CNP3526	CNP3526	CNP3526
83	Plug(CN851)	·····	CKS1242	CKS1242	·····	·····
84	Cord	·····	CDE4138	CDE4138	·····	·····
85	Cap	·····	CNV2680	CNV2680	·····	·····
86	Spacer	·····	CNM4027	CNM4027	·····	·····
87	Remote Control Assy	·····	CXA6155	CXA6155	·····	·····
88	Battery Cover	·····	CNS2850	CNS2850	·····	·····
89	IC(IC922)	·····	RPM-678CBR	RPM-678CBR	·····	·····
90	Spacer	·····	CNM3882	·····	CNM3882	·····

● **CD Mechanism Module(Exploded View:Page 2-11)**

Mark No.	Description	Part No.	Mark No.	Description	Part No.
1	Screw	PMS26P040FMC	11	Screw	CBA1077
2	Control Unit	CWX1641	12	Screw	CBA1230
3	Connector(CN1001)	CKS1955	13	Screw	CBA1296
4	Connector(CN1701)	CKS2775	14	Washer	CBF1038
5	Connector(CN1002)	CKS2811	15	Washer	CBF1060
6	Connector(CN1801)	CKS2196	16	Spring	CBH1415
7	CD Mechanism Unit	CXA6475	17	Spring	CBH1417
8	Screw	BMZ20P030FMC	18	Spring	CBH1418
9	Screw	BSZ20P040FMC	19	Spring	CBH1421
10	Screw	CBA1041	20	Spring	CBH1423

Mark	No.	Description	Part No.
	21	Spring	CBH1457
	22	Spring	CBH1552
	23	Spring	CBH1553
	24	Spring	CBH1554
	25	Spring	CBH1555
	26	Spring	CBH1556
	27	Spring	CBH1557
	28	Spring	CBH1558
	29	Spring	CBH1559
	30	Spring	CBH1560
	31	Spring	CBH1576
	32	Spring	CBH1577
	33	Spring	CBH1578
	34	Spring	CBH1583
	35	Spring	CBH1628
	36	Spring	CBL1170
	37	Spring	CBL1171
	38	Spring	CBL1172
	39	Connector	CDE4147
	40	PU Unit	CGY1031
	41	Shaft	CLA2220
	42	Roller	CLA2255
	43	Shaft	CLA2256
	44	Frame	CNC4888
	45	Arm	CNC4889
	46	Lever	CNC4891
	47	Lever	CNC4892
	48	Bracket	CNC4893
	49	Arm	CNC4895
	50	Arm	CNC4898
	51	Bracket	CNC5424
	52	Spacer	CNM3315
	53	Sheet	CNM4066
	54	Sheet	CNM3693
	55	Bracket	CNM3917
	56	Belt	CNT1053
	57	Clamper Unit	CXA6552
	58	Guide	CNV2891
	59	Holder	CNV3276
*	60	Roller	CNV3412
	61	Damper	CNV3720
	62	Arm	CNV3565
	63	Arm	CNV3566
	64	Gear	CNV3567
	65	Gear	CNV3568

Mark	No.	Description	Part No.
	66	Gear	CNV3569
	67	Gear	CNV3570
	68	Arm	CNV3571
	69	Holder	CNV3572
	70	Gear	CNV3573
	71	Holder	CNV3574
	72	Holder	CNV3575
	73	Holder	CNV3576
	74	Rack	CNV3577
	75	Arm	CNV3578
	76	Plate	CNV3629
	77	Guide	CNV3694
	78	P.C.Board	CNP3418
	79	P.C.Board	CNP3666
	80	Screw Unit	CXA2375
	81	Motor Unit	CXA4649
	82	Chassis Unit	CXA5602
	83	Arm Unit	CXA5603
	84	Arm Unit	CXA5604
	85	Bracket Unit	CXA5605
	86	Lever Unit	CXA5606
	87	Arm Unit	CXA5607
	88	Arm Unit	CXA5608
	89	Gear Unit	CXA5609
	90	Motor Unit	CXA5703
	91	Bracket Unit	CXA5938
	92	Frame Unit	CXA6192
	93	Motor Unit	CXA6456
	94	Screw	JFZ17P035FNI
	95	Screw	JFZ20P014FMC
	96	Screw	JFZ20P020FZK
	97	Screw	JFZ20P025FMC
	98	Photo-transistor	PT4800
	99	Washer	YE15FUC
	100	Washer	YE20FUC
	101	Spacer	CNM3999
	102	Sheet	CNM4028
	103	Holder	CNV3805
	104	Spacer	CNC5436
	105	Screw	JFZ20P045FMC

7. ELECTRICAL PARTS LIST

NOTE:

- Parts whose parts numbers are omitted are subject to being not supplied.
- The part numbers shown below indicate chip components.

Chip Resistor

RS1/○S○○○J,RS1/○○S○○○J

Chip Capacitor (except for CQS.....)

CKS....., CCS....., CSZS.....

=====Circuit Symbol & No. Part Name=====										Part No.
Unit Number : CWE1313(DEH-605RDS)										
CWE1311(DEH-505SDK,505,405SDK,405)										
Unit Name : FM/AM Tuner Unit										
MISCELLANEOUS										
IC	1									PA2021B
IC	2									PA2022A
Q	1									3SK195
Q	2	202								2SC2712
Q	3									DTC124EU
Q	51									DTC124TU
Q	52									2SC4207
Q	53									2SA1586
Q	201									2SK435
D	1									1SV172
D	2	3	4							KV1410
D	5									MA151WK-MT
D	6	151	201	202						MA157-MR
D	203									SVC203CP
L	1									Inductor LCTBR12K2125
L	2	52								Ferri-Inductor LAU150K
L	51									Ferri-Inductor LAU2R2K
L	201									Ferri-Inductor LAU4R7K
L	202									Coil 1mH CTF1026
L	203									Inductor LAU390K
L	204									Ferri-Inductor LAU680K
L	205									Ferri-Inductor LAU330K
L	206									Inductor CTF1198
T	1									Coil CTC1078
T	2									Coil CTE1077
T	3									Coil CTC1077
T	4									Coil CTC1079
T	51									Coil CTC1081
T	202									Coil CTB1102
T	203									Coil CTE1076
T	204									Coil CTE1074
T	205									Coil CTE1075
AR	1									Capacitor with Discharge Gap DSP-201M
CF	1	51								52(DEH-605RDS) CTF1292
CF	1	51								52(DEH-505SDK,505,405SDK,405) CTF1290
CF	201									Ceramic Filter CTF1291
CF	202									Ceramic Filter CTF1300
X	151									Ceramic Resonator CSS1308
X	201									Crystal Resonator CSS1111
VR	51									Semi-fixed 47kΩ(B) CCP1210
VR	52									Semi-fixed 68kΩ(B) CCP1211
VR	151									Semi-fixed 10kΩ(B) CCP1206
VR	152									Semi-fixed 22kΩ(B) CCP1208

=====Circuit Symbol & No. Part Name=====										Part No.
RESISTORS										
R	1									RS1/16S223J
R	2									RS1/16S271J
R	3	10	16	18	20					RS1/16S223J
R	4	5								RS1/16S0R0J
R	6									RS1/16S680J
R	7	14								RS1/16S563J
R	8									RS1/16S152J
R	9									RS1/16S473J
R	11									RS1/16S474J
R	12									RS1/16S123J
R	13	15	217							RS1/16S563J
R	17	206								RS1/16S102J
R	21	22								RS1/16S560J
R	51	74								RS1/16S391J
R	52									RS1/16S152J
R	53									RS1/16S751J
R	55	157								RS1/16S682J
R	56									RS1/16S332J
R	58	73	203							RS1/16S102J
R	60									RS1/16S123J
R	72									RS1/16S391J
R	101									RS1/16S224J
R	102	222								RS1/16S822J
R	103									RS1/16S223J
R	104									RS1/16S822J
R	151	152								RS1/16S272J
R	153									RS1/16S103J
R	154	155	202							RS1/16S103J
R	156									RS1/16S153J
R	158									RS1/16S183J
R	159	216								RS1/16S103J
R	204	213								RS1/16S222J
R	205									RS1/16S823J
R	207									RS1/16S225J
R	208									RS1/16S752J
R	209									RS1/16S822J
R	214									RS1/16S333J
R	215									RS1/16S330J
R	218									RS1/16S333J
R	220									RS1/16S100J
R	221									RS1/16S473J
CAPACITORS										
C	1	54								CCSRCH220J50
C	2									CCSRCH390J50
C	3	102	154	163	203	210				CKSQ✓B473K16
C	4	12								CCSRCH070D50
C	5	53								CCSRCH270J50

=====Circuit Symbol & No. Part Name=====										Part No.
C	6									CKSRYB222K50
C	7									CCSRCH040C50
C	8	105								CKSRYB222K50
C	9	16								CCSRCH470J50
C	10									CCSRCH090D50
C	11									CKSRYB223K25
C	13									CCSRCH070D50
C	14									CKSRYB103K50
C	15	22	55	101	151	164	219	220	225	227 CKSQYB104K25
C	17									CCSRCH100D50
C	18									CCSRCH080D50
C	19	20	21	52	62	71	74	201	207	209 CKSRYB103K50
C	23									CEA3R3M50LL
C	24	29	73	106	213					CKSRYB223K25
C	25									CKSRYB682K50
C	26	28	231							CEA101M16LL
C	51	223								CKSRYB103K50
C	56	162	211							CEA010M50LL
C	57	64	66	237						CCSRCH101J50
C	58									CKSRYB153K25
C	60									CEAR47M50LL
C	61									CEAR22M50LL
C	63									CKSQYB104K25
C	65									CEA0R1M50LL
C	103									CKSQYB222K50
C	104									CEA4R7M35LL
C	152	153								CKSRYB223K25
C	155									CEAR47M50LL
C	156									CKSQYB563K16
C	158	212								CEA100M16LL
C	159									CCSRCH331J50
C	160									CKSYB105K16
C	161									CKSQYB104K25
C	202									CKSRYB332K50
C	204									CCSRCH120J50
C	205									CCSRCH560J50
C	206	221								CCSRCH680J50
C	208									CEA470M16LL
C	214	230								CKSRYB472K50
C	215	228								CKSRYB103K50
C	216									CCSRCH100D50
C	217									CCSRCH221J50
C	218	234								CEA220M16LL
C	222									CCSRCH150J50
C	224									CCSRCH181J50
C	226									CEA4R7M35LL
C	229									CEAR68M50LL
C	232									CCSRCH390J50
C	233									CKSRYB332K50
C	235									CKSQYB104K25
C	236									CKSRYB223K25

Unit Number : CWX1648(DEH-605RDS)
Unit Name : Tuner Amp Unit

MISCELLANEOUS

IC	471							NJM4558L
IC	481							LC7538JMHS
IC	482	483						NJM4558MD
IC	501							LC72140M
IC	551							PA3029A
IC	601							PD4483B
IC	771							CWV1044
IC	961							PAJ001A
IC	971							PA2023A
Q	451	452	502	504	508	771	773	2SC2712

=====Circuit Symbol & No. Part Name=====										Part No.
Q	453	454	455	456						DTC314TK
Q	457									2SA1162
Q	501									2SC3295
Q	503									2SC3098
Q	505	509								2SK208
Q	551	601	604	606	864	957	983			DTC114EK
Q	602	863	982							DTA114EK
Q	603	605	607	956						2SB1238
Q	772									DTC124EK
Q	861	862								2SC2712
Q	981									2SD2396
D	501	971								MA151WK-MT
D	504	505								MA3027H
D	771	972	973							1SS133
D	772									MTZ4R7B
D	861									MA151WA-MN
D	951	952	957	961						ERA15-02VH
D	956									ERA15-10VH
D	981									RB100AVH
D	984									HZS9LC3
L	501									Ferri-Inductor CTF-157
L	502									Ferri-Inductor LAU220K
L	601	602	603							Ferri-Inductor LAU470K
TH	601									Thermistor CCX1008
IB	551	552								Diode Array CWW1338
IB	601									Diode Array CWW1336
IB	602									Diode Array CWW1337
X	501									Crystal Resonator CSS1011
X	601									Crystal Resonator CSS1023
VR	771									Semi-fixed 2.2kΩ(B) VRMB6VS222
BZ	601									Buzzer CPV1011
TUN	501									FM/AM Tuner Unit CWE1313

RESISTORS

R	451	452	514	515	521	522	602	604	618	619	RS1/10S473J
R	453	454									RS1/10S0R0J
R	455	456	457	458	463	464	529	533	536	538	RS1/10S102J
R	459	460	505	865	866	952	956				RS1/10S223J
R	467	468	488	489	490	491					RS1/10S103J
R	471	472									RS1/10S272J
R	473	474									RD1/4PS163JL
R	475	476									RS1/10S273J
R	477	478									RS1/10S331J
R	481	482									RS1/10S272J
R	485	486	487	566	567	568	569				RD1/4PS472JL
R	492	493	494	495	507	974					RS1/10S103J
R	503	508	509	512	516	530	551	552	553	554	RS1/10S472J
R	504	511	513	534	535	601	603	863			RS1/10S222J
R	506										RS1/10S221J
R	510										RS1/10S123J
R	517	518	519	520							RD1/4PS222JL
R	523										RS1/10S563J
R	524	784									RS1/10S101J
R	525	782									RS1/10S332J
R	526										RS1/10S331J
R	527										RS1/10S821J
R	528										RS1/10S680J
R	531										RS1/8S103J
R	532	781									RS1/10S152J
R	539	540	541	605	606	616	652	657	658	659	RS1/10S102J
R	542										RS1/10S822J
R	545	546									RS1/8S0R0J
R	548										RS1/10S330J
R	549										RD1/4PS102JL

=====Circuit Symbol & No.	Part Name=====	Part No.
R 555 556		RS1/10S2R2J
R 557		RD1/4PS102JL
R 558 559 560 561 562 563 564 565		RD1/4PS2R2JL
R 570		RD1/4PS752JL
R 571		RS1/10S560J
R 573		RS1/10S682J
R 617		RS1/8S473J
R 620 963		RS1/10S683J
R 621 634 772 773 774 775 776 777 778		RS1/10S473J
R 622 624		RD1/4PS222JL
R 623 625 971		RS1/10S104J
R 626		RS1/10S183J
R 627 629 632 957 973 984		RS1/10S472J
R 628 630 958		RD1/4PS272JL
R 633		RD1/4PS472JL
R 645 646 647		RS1/10S472J
R 648		RS1/10S682J
R 651		RD1/4PS102JL
R 653 654 655 656		RS1/10S681J
R 660 662 663 664 780 783 972		RS1/10S102J
R 670 671 672		RD1/4PS472JL
R 673		RD1/4PS103JL
R 771		RS1/10S471J
R 861 862		RD1/4PS821JL
R 864		RS1/8S222J
R 951		RS1/10S0R0J
R 959		RD1/4PS513JL
R 961		RS1/8S823J
R 962		RS1/10S363J
R 964		RD1/4PS473JL
R 965		RD1/4PS273JL
R 966		RS1/10S103J
R 981		RD1/4PS471JL
R 982		RD1/4PS221JL
R 983		RS1/10S392J
CAPACITORS		
C 451 452		CEAS4R7M25
C 471 472 481 482 861		CEAS100M16
C 473 474		CCSQCH560J50
C 475 951 963	1000 μ F/16V	CCH1149
C 476 477		CKSQYB393K25
C 483 484 485 486 491 492 553 567 568 569		CEA100M16LL
C 487 488		CKSYB224K16
C 489 490		CKSQYB272K50
C 493 494 506 507		CKSQYB223K25
C 495 496		CKSQYB562K50
C 497 498 499 500		CCSQCH330J50
C 501 505 509 512 517		CCSQCH101J50
C 502 607 982		CKSQYB473K25
C 504 510 514 523 772 952 954		CKSQYB103K25
C 511		CCSQCH681J50
C 513	0.047 μ F	CCG1008
C 515		CFTNA474J50
C 516		CEA4R7M35LL
C 518 519		CCSQCH120J50
C 520	4.7 μ F/16V	CCH1165
C 551 552 554 555 606		CKSQYB102K50
C 556	3300 μ F/16V	CCH1150
C 557 558 601 609 956		CKSQYB104K25
C 559 560 561 562 563 564 565 566		CQMA104J50
C 570 608		CEA100M16LL
C 571 572 573 574		CCSQCH220J50
C 575		CEAS4R7M25
C 603		CKSQYB104K25
C 604 605		CCSQCH150J50
C 610		CKSQYB104K25

=====Circuit Symbol & No.	Part Name=====	Part No.
C 612 613		CKSQYB102K50
C 771		CEAR47M50LL
C 773 862		CEA100M16LL
C 863 864		CCSQCH221J50
C 962		CEAR22M50LL
C 964		CEA2R2M50LL
C 965		CEA220M6R3LL
C 971		CEA010M50LL
C 972		CEAS470M10
C 973		CEAS101M10
C 974		CEAS221M10
C 975	330 μ F/10V	CCH1181
C 981		CEAS331M16

Unit Number : CWX1641
Unit Name : Control Unit

MISCELLANEOUS

IC 1001		UPC2571GS
IC 1201		UPD63700GF
IC 1301		PA3026
IC 1302		XRA6285FP
IC 1303		NJM4558M
IC 1601		TC9268F
IC 1602		TA2063F
IC 1701		PQ05TZ51
Q 1001		2SB1260
Q 1601 1602		2SD1781K
Q 1603		2SB709A
D 1601		MA151WA-MN
D 1701 1702 1703 1704		SC016-2
D 1801 1802	Chip LED	CL200IRX
L 1601	Inductor	LCTBR39K2125
X 1601	Crystal Resonator	CSS1067
S 1801 1802	Switch(Home,Clamp)	CSN1028
VR1001	Semi-fixed 2.2kΩ(B)	CCP1177
VR1002	Semi-fixed 22kΩ(B)	CCP1183
VR1003 1004	Semi-fixed 47kΩ(B)	CCP1185

RESISTORS

R 1001	RS1/8S100J
R 1002	RS1/8S120J
R 1003 1201 1307 1309	RS1/16S103J
R 1004 1013 1024 1025 1311 1315 1318 1708	RS1/16S102J
R 1005	RS1/16S823J
R 1006	RS1/16S182J
R 1007	RS1/16S333J
R 1011 1012	RS1/16S683J
R 1014 1015 1310	RS1/16S473J
R 1018	RS1/16S622J
R 1019	RS1/16S563J
R 1020	RS1/16S622J
R 1021	RS1/16S513J
R 1022	RS1/16S133J
R 1027	RS1/16S183J
R 1028	RS1/16S822J
R 1301 1302	RS1/16S222J
R 1303 1606 1607	RS1/16S223J
R 1304	RS1/16S123J
R 1305 1306 1705	RS1/16S332J
R 1308	RS1/16S163J
R 1314	RS1/16S0R0J
R 1317	RS1/16S473J
R 1601	RS1/16S301J
R 1604 1605	RS1/16S102J
R 1608 1609	RS1/16S162J
R 1610	RS1/16S103J
R 1801 1802	RS1/8S821J

=====Circuit Symbol & No.	Part Name=====	Part No.
CAPACITORS		
C 1001 1008 1010 1011 1303		CKSRYB102K50
C 1002 1609 1706		CEV101M6R3
C 1003		CKSQYB104K16
C 1004		CEV470M6R3
C 1005		CCSRCH101J50
C 1006		CKSRYB561K50
C 1007 1704		CKSYB334K16
C 1009		CCSRCH181J50
C 1012 1307 1310 1605 1608		CKSRYB103K50
C 1013		CKSRYB472K50
C 1014		CCSRCH220J50
C 1015 1016 1017 1018 1201 1202		CKSYF105Z16
C 1021		CKSYB104K16
C 1022		CKSRYB332K50
C 1023		CKSRYB561K50
C 1301 1302		CKSRYF683Z25
C 1304		CKSRYB152K50
C 1305		CKSRYB271K50
C 1308		CKSRYF103Z50
C 1309		CEV470M16
C 1601		CCSRCH151J50
C 1602		CCSRCH100D50
C 1603 1604 1705		CKSYB224K16
C 1606 1607		CCSRCH090D50
C 1612		CEV220M6R3
C 1613 1614		CEV4R7M35
C 1701 1702		CCSRCH100D50
C 1703		CEV220M16
Unit Number : CWX1661(DEH-605RDS)		
Unit Name : Key Board Unit		
MISCELLANEOUS		
IC 901		PD6122A
Q 901 902		2SB1132
Q 903		UN2211
D 901 902		MA153-MC
D 903		MA3047M
L 901	Coil	LCTB150K3216
X 901	Ceramic Resonator	CSS1084
IL 901 902 903	Lamp 14V 40mA	CEL1297
IL 904 905 906	Lamp 14V 40mA	CEL1295
LCD901	LCD	CAW1228
RESISTORS		
R 901 902 903 908		RS1/8S222J
R 904 906		RS1/10S472J
R 905 907		RS1/10S332J
R 909 910		RS1/8S471J
R 911 912 913 914 915 916 917 918 919		RS1/10S471J
R 920		RS1/10S121J
CAPACITORS		
C 901 902 903 904		CKSQYB103K25

=====Circuit Symbol & No.	Part Name=====	Part No.
Unit Number : CWX1662(DEH-505SDK,505) CWX1664(DEH-405SDK,405)		
Unit Name : Key Board Unit		
MISCELLANEOUS		
IC 921		LC7582E
IC 922	(DEH-505SDK,505)	RPM-678CBR
D 921 922 923		MA153-MC
IL 921 922 923	Lamp 14V 40mA	CEL1295
IL 924 925 926	Lamp 14V 40mA	CEL1297
LCD901	LCD	CAW1229
RESISTORS		
R 921	(DEH-505SDK,505)	RS1/10S470J
R 923 926 930 934		RS1/8S822J
R 924 927 931 935		RS1/10S133J
R 925 928 932 936		RS1/10S223J
R 929 933 937		RS1/10S683J
R 938 939		RS1/10S104J
R 940 941 942		RS1/10S103J
CAPACITORS		
C 921	(DEH-505SDK,505)	CEA470M6R3LS
C 922		CCSQCH301J50
C 923		CKSQYF104Z25
C 924		CKSQYF224Z25
C 925		CKSQYB103K50
Unit Number :		
Unit Name : Detector P.C.Board		
P 1 2	Photo Transistor	PT4800
Miscellaneous Parts List		
M 1	Motor Unit(Spindle)	CXA5703
M 2	Motor Unit(Carriage)	CXA4649
M 3	Motor Unit(Loading)	CXA6456
	PU Unit	CGY1031

Circuit Symbol & No.	DEH-605RDS Part No.	DEH-505SDK Part No.	DEH-505 Part No.	DEH-405SDK Part No.	DEH-405 Part No.
Tuner Amp Unit	CWX1648	CWX1649	CWX1651	CWX1650	CWX1652
R782	RS1/10S332J	RS1/10S332J	•••••	RS1/10S332J	•••••
R783	RS1/10S102J	•••••	•••••	•••••	•••••
R784	RS1/10S101J	RS1/10S101J	•••••	RS1/10S101J	•••••
R851,852	•••••	RD1/4PS821JL	RD1/4PS821JL	•••••	•••••
R853,854	•••••	RS1/10S222J	RS1/10S222J	•••••	•••••
R855,856	•••••	RS1/10S223J	RS1/10S223J	•••••	•••••
C604,605	CCSQCH150J50	•••••	•••••	•••••	•••••
C610	CKSQYB104K25	•••••	•••••	•••••	•••••
C772	CKSQYB103K25	CKSQYB103K25	•••••	CKSQYB103K25	•••••
C773	CEA100M16LL	CEA100M16LL	•••••	CEA100M16LL	•••••
C851	•••••	CEAS100M16	CEAS100M16	•••••	•••••
C852	•••••	CEA100M16LL	CEA100M16LL	•••••	•••••
C853,854	•••••	CCSQCH221J50	CCSQCH221J50	•••••	•••••

● **The DEH-505SDK, DEH-505, DEH-405SDK and DEH-405 Parts Lists enumerate the parts which differ from those enumerated in the DEH-605RDS Parts List only. The parts other than those enumerated in the former are identical with those in the latter, to which you are requested to refer, accordingly. The DEH-605RDS Parts List is given on page 1-42.**

Tuner Amp Unit

Circuit Symbol & No.	DEH-605RDS Part No.	DEH-505SDK Part No.	DEH-505 Part No.	DEH-405SDK Part No.	DEH-405 Part No.
Tuner Amp Unit	CWX1648	CWX1649	CWX1651	CWX1650	CWX1652
IC601	PD4483B	PDR009B	PDR009B	PDR009B	PDR009B
IC771	CWV1044	CWV1045	·····	CWV1045	·····
Q455,456,771	2SC2712	2SC2712	·····	2SC2712	·····
Q601	DTC114EK	DTC114EK	·····	DTC114EK	·····
Q773	2SC2712	·····	·····	·····	·····
Q851,852	·····	2SC2712	2SC2712	·····	·····
D771	1SS133	·····	·····	·····	·····
D772	MTZ4R7B	MTZ4R7B	·····	MTZ4R7B	·····
VR771	VRMB6VS222	·····	·····	·····	·····
BZ601	CPV1011	CPV1011	·····	CPV1011	·····
X601	CSS1023	CSS1065	CSS1065	CSS1065	CSS1065
FM/AM Tuner Unit	CWE1313	CWE1311	CWE1311	CWE1311	CWE1311
R605,606,780	RS1/10S102J	RS1/10S102J	·····	RS1/10S102J	·····
R607,779	·····	RS1/10S0R0J	·····	RS1/10S0R0J	·····
R608	·····	RS1/10S0R0J	RS1/10S0R0J	RS1/10S0R0J	RS1/10S0R0J
R609	·····	·····	·····	RS1/10S0R0J	RS1/10S0R0J
R611	·····	·····	RS1/10S473J	·····	RS1/10S473J
R613	·····	RS1/10S473J	RS1/10S473J	·····	·····
R614	·····	RS1/10S473J	RS1/10S473J	RS1/10S473J	RS1/10S473J
R615	·····	RS1/10S102J	·····	RS1/10S102J	·····
R636,637,638,639	·····	RD1/4PS103JL	RD1/4PS103JL	RD1/4PS103JL	RD1/4PS103JL
R640,641,642,643	·····	RS1/10S103J	RS1/10S103J	RS1/10S103J	RS1/10S103J
R644	·····	RS1/10S103J	RS1/10S103J	RS1/10S103J	RS1/10S103J
R648	RS1/10S682J	RS1/10S0R0J	RS1/10S0R0J	RS1/10S0R0J	RS1/10S0R0J
R649	·····	RS1/10S105J	RS1/10S105J	RS1/10S105J	RS1/10S105J
R673	RD1/4PS103JL	·····	·····	·····	·····
R771	RS1/10S471J	RS1/10S471J	·····	RS1/10S471J	·····
R772	RS1/10S473J	RS1/10S473J	·····	RS1/10S473J	·····
R773,774,775,776	RS1/10S473J	·····	·····	·····	·····
R777,778	RS1/10S473J	·····	·····	·····	·····
R781	RS1/10S152J	RS1/10S152J	·····	RS1/10S152J	·····

PIONEER
The Art of Entertainment

Service Manual

ORDER NO.
CRZ1563

The chapter 1 of this Service Manual will not be reprinted. On your additional orders, we may supply only the chapter 2. For the chapter 1, please make copies and attach to the chapter 2 at your side if necessary.

HIGH POWER CD PLAYER WITH RDS TUNER

DEH-605RDS EW,X1B/EW

HIGH POWER CD PLAYER WITH FM/MW/LW TUNER

DEH-505SDK GR
DEH-505 EW,X1B/EW
DEH-405SDK GR
DEH-405 EW,X1B/EW

● **See the service manual CX-540(CRT1574) for the CD mechanism description, disassembly and circuit description.**

CHAPTER 2

CONTENTS

CHAPTER 2

1. PACKING METHOD 2-2
2. BLOCK DIAGRAM 2-7
3. EXPLODED VIEW 2-9
4. CIRCUIT DIAGRAM AND PATTERN

4.1 TUNER AMP UNIT(DEH-605RDS) 2-13
4.2 TUNER AMP UNIT(DEH-505SDK,405SDK) 2-18
4.3 TUNER AMP UNIT(DEH-505,405) 2-23
4.4 CD MECHANISM MODULE 2-28
4.5 FM/AM TUNER UNIT 2-37
4.6 KEY BOARD UNIT(DEH-605RDS) 2-41
4.7 KEY BOARD UNIT(DEH-505SDK,505,405SDK,405) 2-43

PIONEER ELECTRONIC CORPORATION 4-1, Meguro 1-Chome, Meguro-ku, Tokyo 153, Japan
PIONEER ELECTRONICS SERVICE INC. P.O.Box 1760, Long Beach, California 90801 U.S.A.
PIONEER ELECTRONICS OF CANADA, INC. 300 Allstate Parkway Markham, Ontario L3R 0P2 Canada
PIONEER ELECTRONIC [EUROPE] N.V. Haven 1087 Keetberglaan 1, 9120 Melsele, Belgium
PIONEER ELECTRONICS AUSTRALIA PTY.LTD. 178-184 Boundary Road, Braeside, Victoria 3195, Australia TEL:[03]580-9911

© **PIONEER ELECTRONIC CORPORATION 1994**

K-FFK. JAN. 1994 Printed in Japan

1. PACKING METHOD

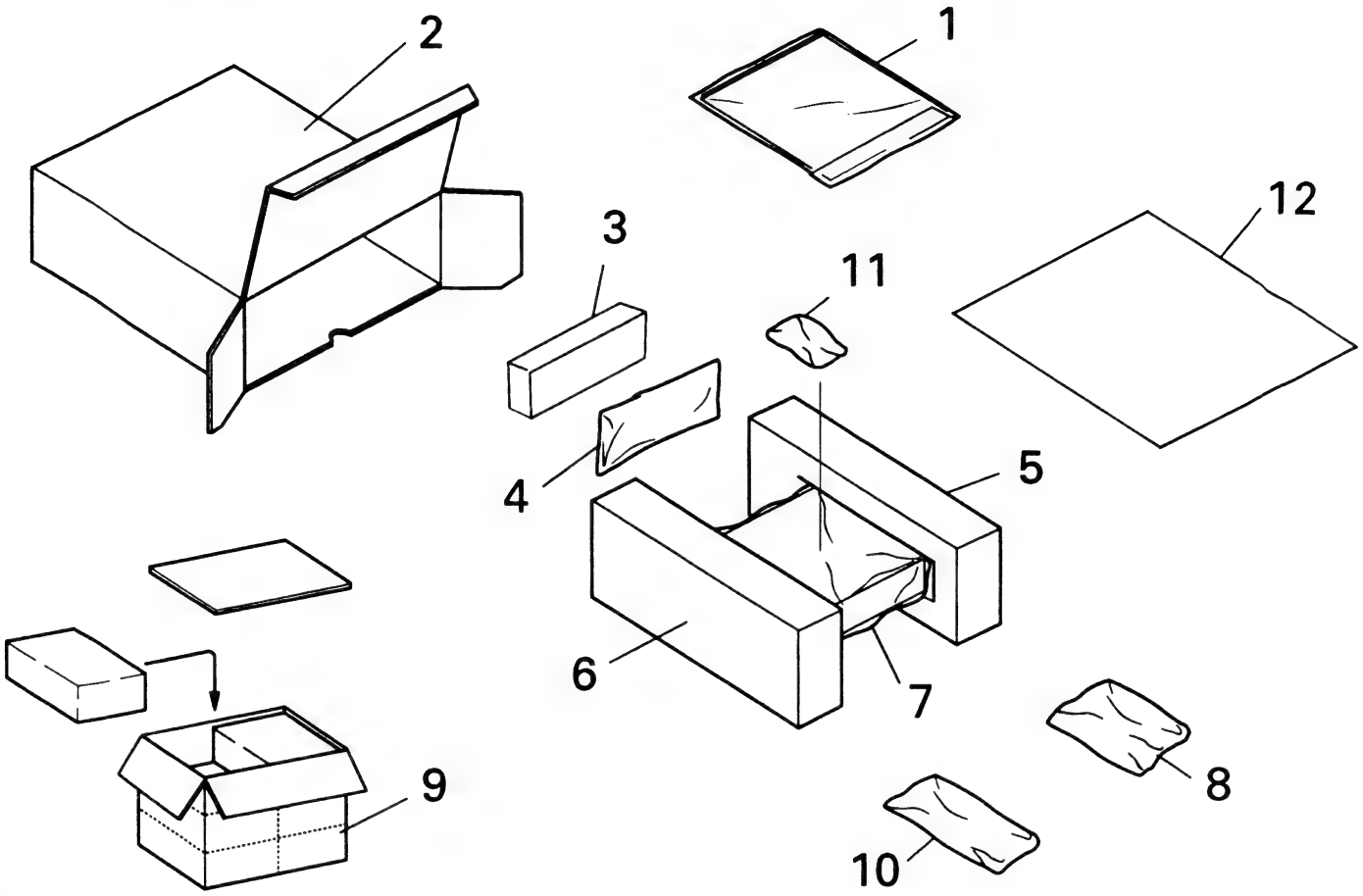

Fig.1

● **Parts List(DEH-605RDS)**

✱: Non Spare Part

Mark	No.	Description	Part No.
	1-1	Owner's Manual	CRD1717
	1-2	Owner's Manual	CRD1718
	1-3	Installation Manual	CRD1719
✱	1-4	Card	CRY-062
✱	1-5	Passport	CRY1013
✱	1-6	Caution Card	CRP1129
	1-7	Polyethylene Bag	CEG1116
	2	Carton	CHG2427
	3	Case	CNS2269
	4	Cord Assy	CDE4142
	5	Protector	CHP1603
	6	Protector	CHP1602
	7	Cover	CEG1092
	8	Accessory Assy	CEA1917
	8-1	Screw	CBA1284
	8-2	Handle(X2)	CNC4947
	8-3	Bush	CNV1009
✱	8-4	Polyethylene Bag	E36-615
	9	Contain Box	CHL2427
	10	·····	
	11	·····	
	12	Spacer(except X1B model)	CHW1387

● **The DEH-505SDK, DEH-505, DEH-405SDK and DEH-405 Parts Lists enumerate the parts which differ from those enumerated in the DEH-605RDS Parts List only. The parts other than those enumerated in the former are identical with those in the latter, to which you are requested to refer, accordingly. The DEH-605RDS Parts List is given on page 2-2.**

Mark	No.	Description	DEH-605RDS	DEH-505SDK	DEH-505	DEH-405SDK	DEH-405
	1-1	Owner's Manual	CRD1717	CRD1723	CRD1720	CRD1723	CRD1720
	1-2	Owner's Manual	CRD1718	•••••	•••••	•••••	•••••
*	1-5	Passport	CRY1013	CRY1013	•••••	CRY1013	•••••
	2	Carton	CHG2427	CHG2429	CHG2428	CHG2420	CHG2419
	9	Contain Box	CHL2427	CHL2429	CHL2428	CHL2420	CHL2419
	10	Accessory Assy	•••••	CEA1473	CEA1473	•••••	•••••
	11	Remote Control Assy	•••••	CXA6155	CXA6155	•••••	•••••

Owner's Manual

Model	Part No.	Language
DEH-605RDS	CRD1717	English,French,Italian,German,Dutch,Spanish,Portuguese
	CRD1718	Swedish,Norwegian,Finnish
DEH-505SDK,405SDK	CRD1723	French,German
DEH-505,405	CRD1720	English,French,Italian,German,Dutch,Spanish,Portuguese, Swedish,Norwegian,Finnish

Installation Manual

Model	Part No.	Language
DEH-605RDS, DEH-505SDK,505, DEH-405SDK,405	CRD1719	English,French,Italian,German,Dutch,Spanish,Portuguese Swedish,Norwegian,Finnish

● **X1B/EW Model**

Mark	No.	Description	DEH-605RDS/EW	DEH-605RDS/X1B/EW
	1-2	Owner's Manual	CRD1718	•••••
*	1-4	Card	CRY-062	URY-001
*	1-5	Passport	CRY1013	CRY1014
	1-7	Polyethylene Bag	CEG1116	E36-618
	7	Cover	CEG1092	UEG-002
	9	Contain Box	CHL2427	UHD-002

Mark	No.	Description	DEH-505/EW	DEH-505/X1B/EW
*	1-4	Card	CRY-062	URY-001
	1-7	Polyethylene Bag	CEG1116	E36-618
	7	Cover	CEG1092	UEG-002
	9	Contain Box	CHL2428	UHD-002

Mark	No.	Description	DEH-405/EW	DEH-405/X1B/EW
*	1-4	Card	CRY-062	URY-001
	1-7	Polyethylene Bag	CEG1116	E36-618
	7	Cover	CEG1092	UEG-002
	9	Contain Box	CHL2419	UHD-002

● **Accessory Assy**

Accessory Assy CEA1917

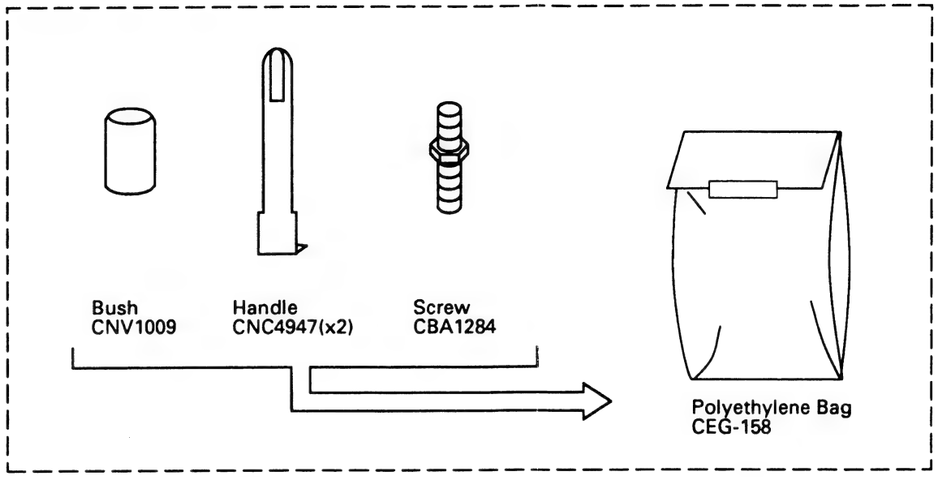

Remote Control Assy CXA6155

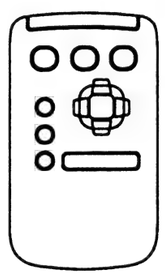

Accessory Assy CEA1473

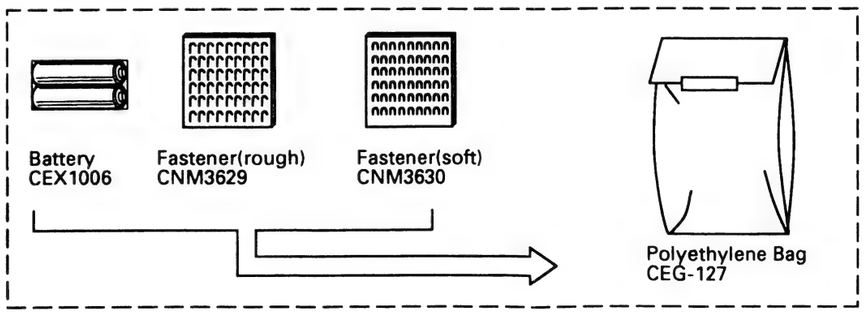

Fig.2

● **LCD(CAW1228).....DEH-605RDS**

SEGMENT

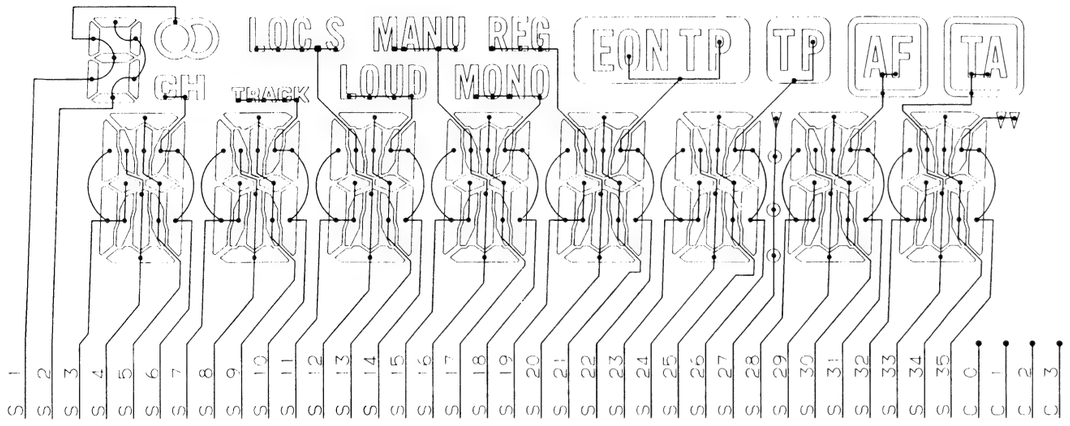

COMMON

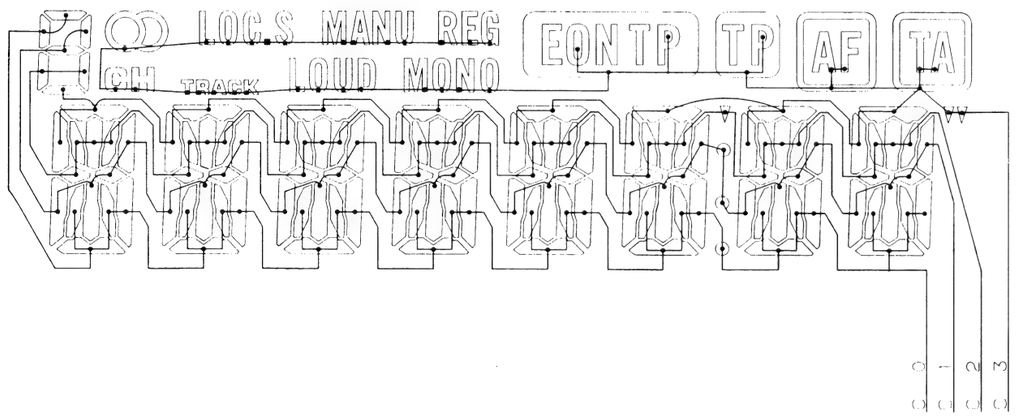

Fig.3

● **LCD(CAW1229).....DEH-505SDK,505,405SDK,405**

SEGMENT

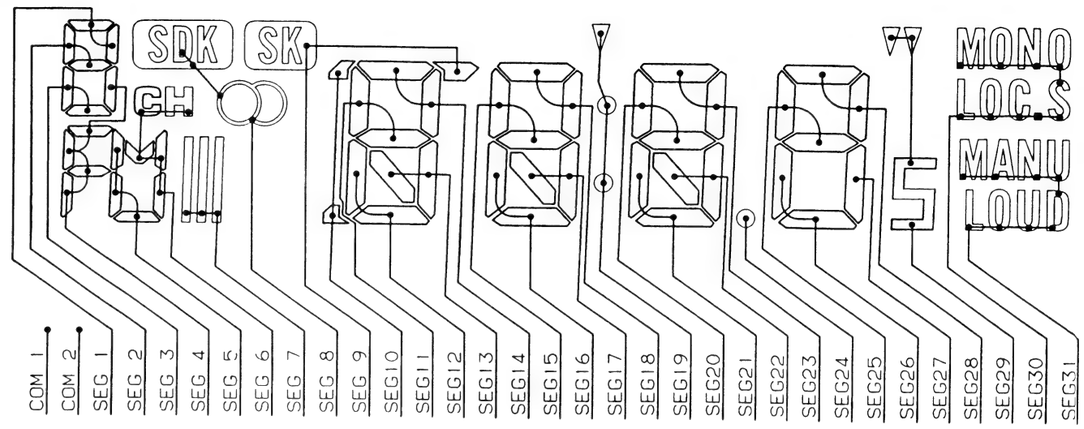

COMMON

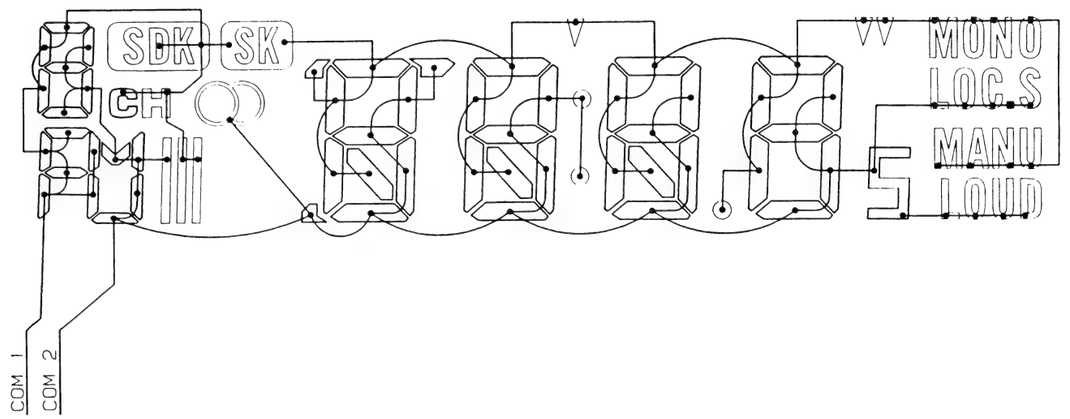

Fig.4

2. BLOCK DIAGRAM

● **DEH-605RDS**

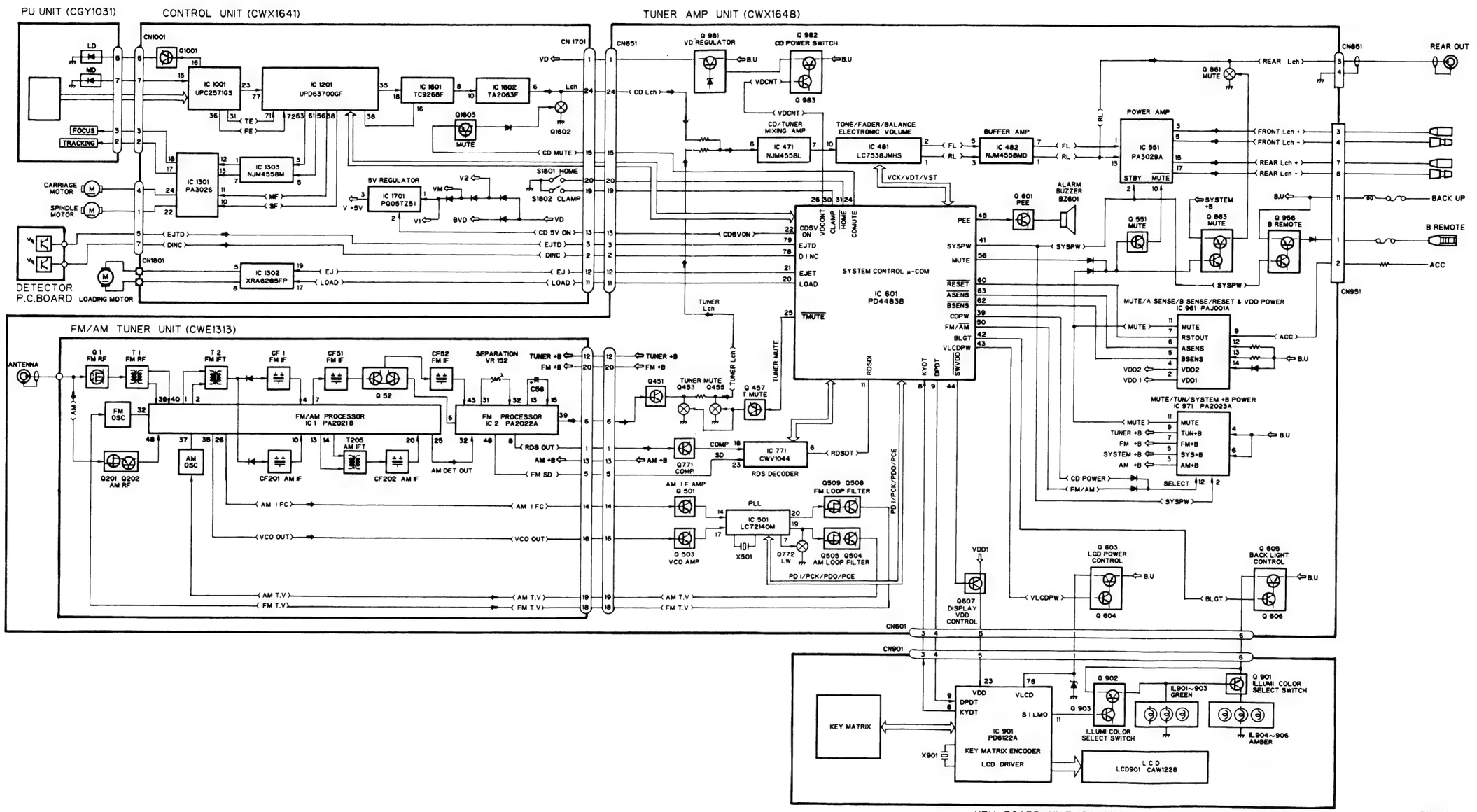

Fig.5

3. EXPLODED VIEW

● **Chassis (Parts List:Page 1-38)**

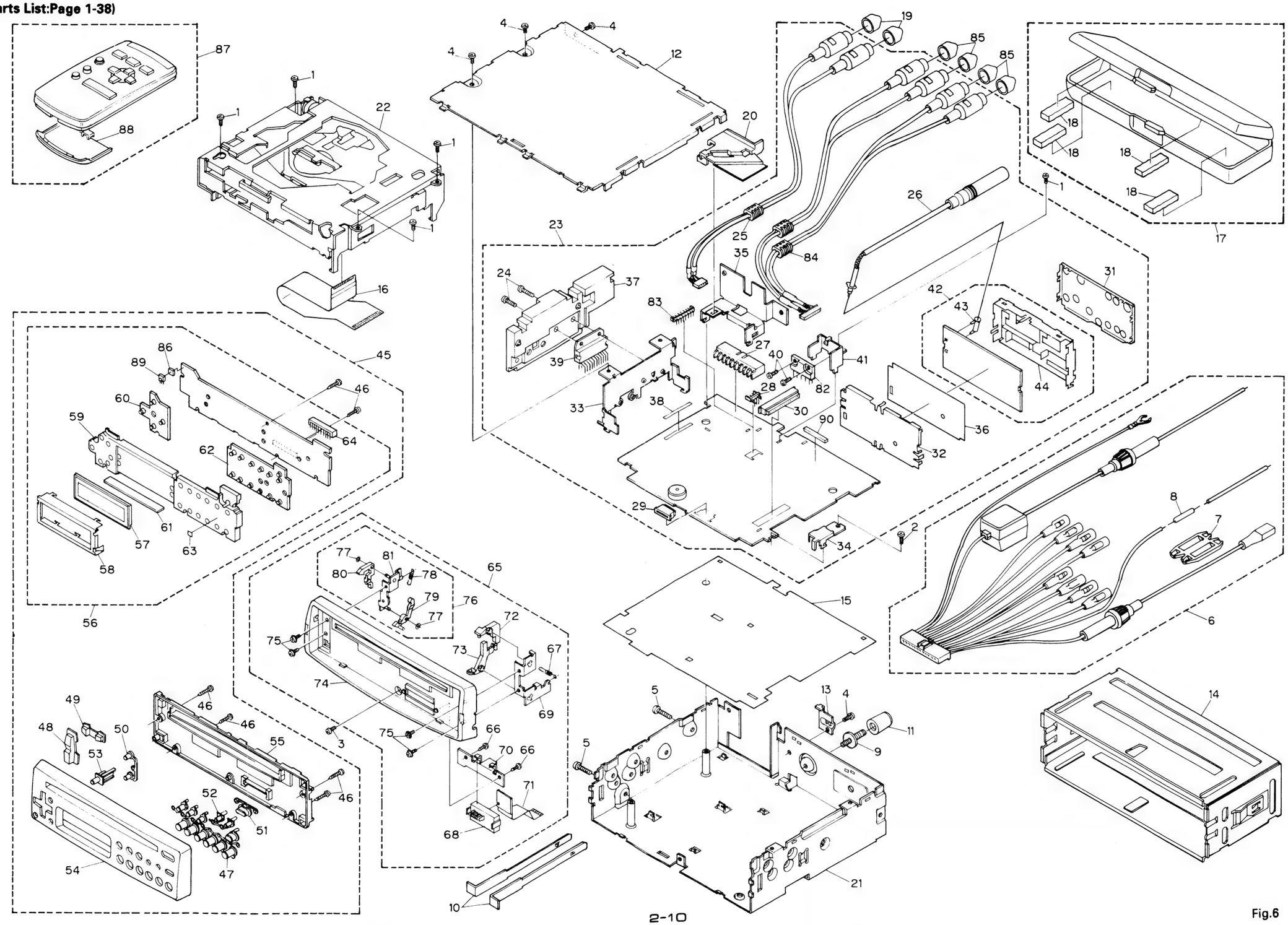

Fig.6

● **CD Mechanism Module (Parts List:Page 1-39)**

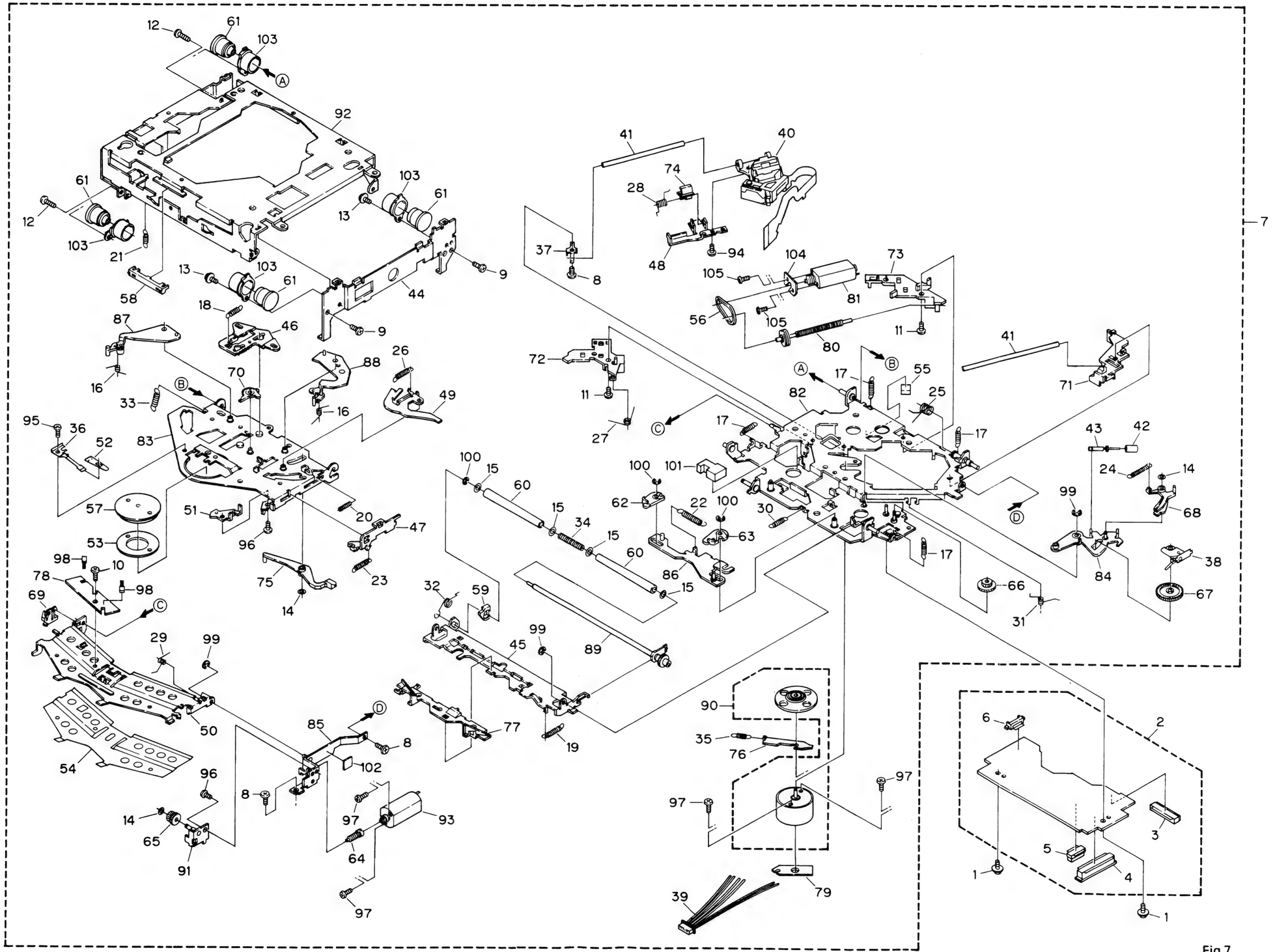

Fig.7

4. CIRCUIT DIAGRAM AND PATTERN

4.1 TUNER AMP UNIT(DEH-605RDS)

● **Connection Diagram**

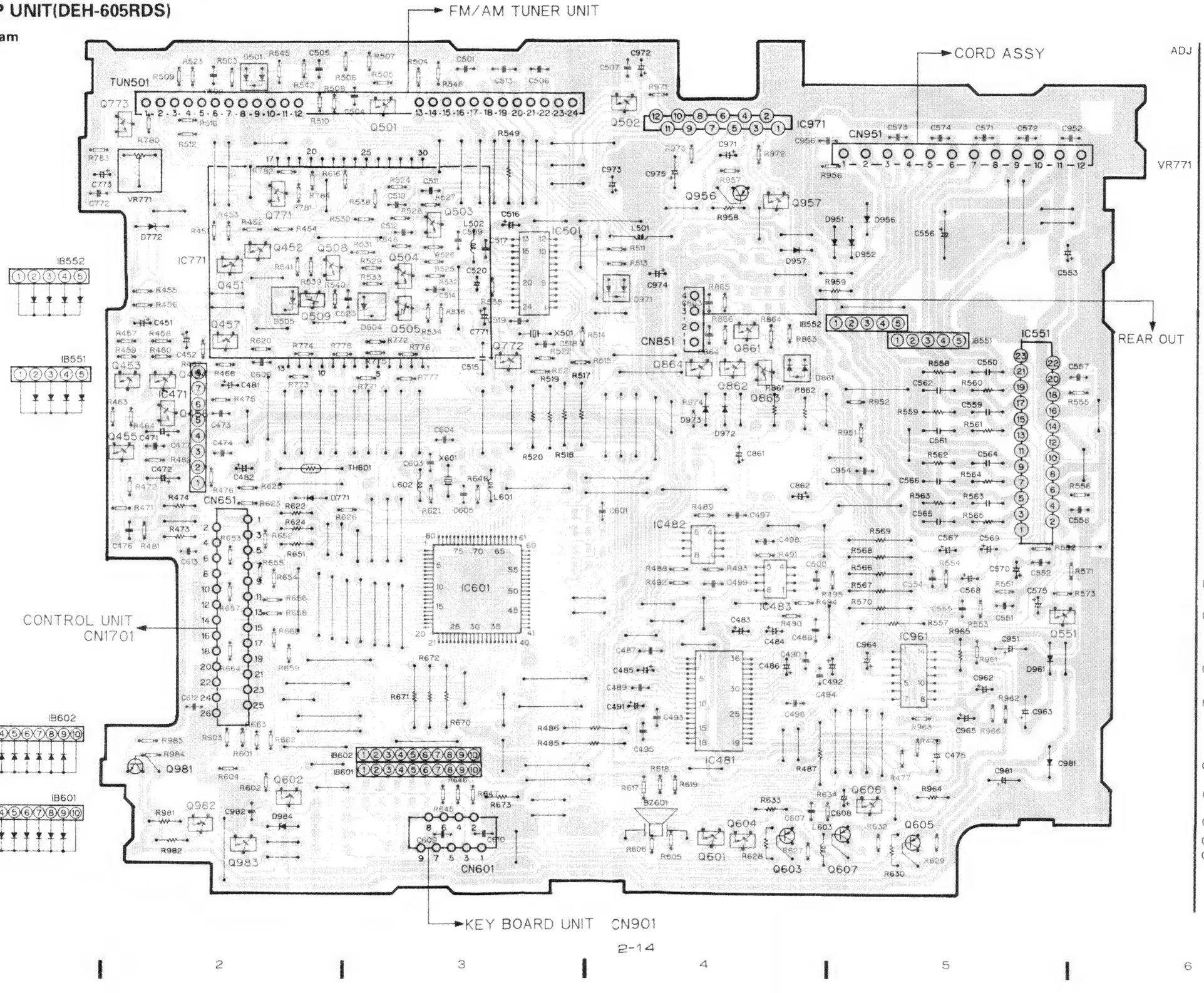

Fig.8

● Circuit Diagram

TUNER AMP UNIT (CWX1648)

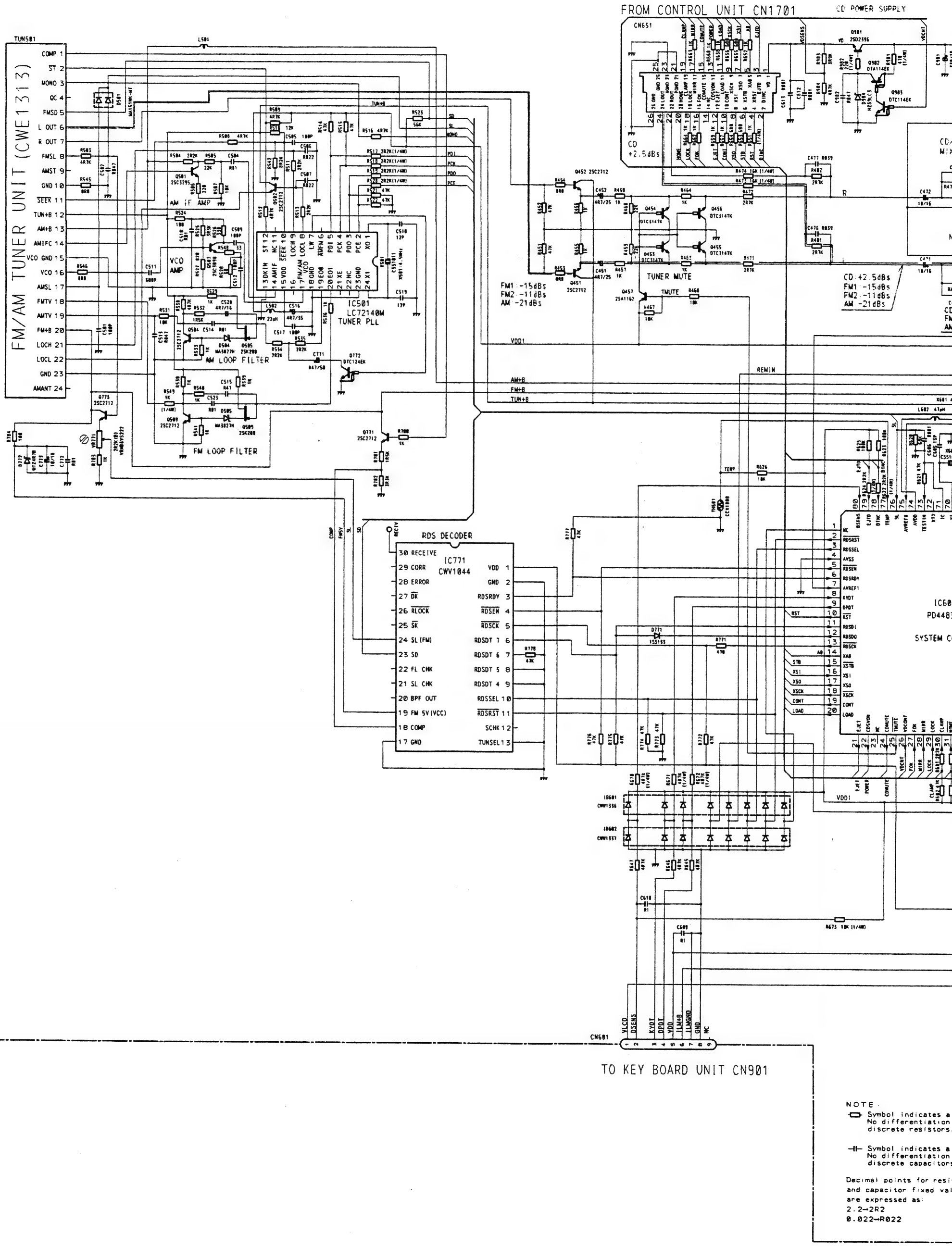

FROM CONTROL UNIT CN1701

CD POWER SUPPLY

CN651

CD
+2.5dBs

Q981 2SD2396

Q982 DTA114EK

Q983 DTC114EK

D981 RB188AVM

REF

AUDIO REF

IC483 NJM4558MD

RR

FR

RL

FL

BUFFER AMP

ELECTRONIC VOLUME

IC481 LC7538JMHS

IC482 NJM4558MD

CD/TUNER MIXING AMP

IC471 NJM4558L

Q452 2SC2712

Q451 2SC2712

Q454 DTC314TK

Q456 DTC314TK

Q455 DTC314TK

Q453 DTC314TK

Q457 2SA1162

TUNER MUTE

TMUTE

FM1 -15dBs
FM2 -11dBs
AM -21dBs

CD +2.5dBs
FM1 -15dBs
FM2 -11dBs
AM -21dBs

CD +6dBs
FM +4dBs
AM -6dBs

CD +11.5dBs
FM +9.5dBs
AM -0.5dBs

VDD1

REMIN

AM+B

FM+B

TUN+B

X601 4.19MHz

L602 47μH

L601 47μH

TEMP

THR01 CCH1008

IC601
PD4483B
SYSTEM CONTROL

RESET

MUTE

MONO

PCL

VCK

VST

VDT

PEE

SWVDD

VLCDPW

BLGT

SYSPW

BZ601 CPV1011 BUZZER

Q601 DTC114EK

Q602 DTA114EK

MUTE

SYSPW

PREMUTE

AMPMUTE

Q551 DTC114EK

AMP MUTE

IC771 CWV1044
DS DECODER

VDD 1
GND 2
RDSRDY 3
RDSEN 4
RDSCK 5
RDSDT 7 6
RDSDT 6 7
RDSDT 5 8
RDSDT 4 9
RDSSEL 10
RDSRST 11
SCHK 12
TUNSEL 13

IB601 CWV1556

IB602 CWV1557

BACK LIGHT CONTROL

Q605 2SB1238

Q606 DTC114EK

LCD POWER CONTROL

Q603 2SB1238

Q604 DTC114EK

R673 10K (1/4W)

VDD2

VDD3

L603 47μH

Q607 2SB1238

DISPLAY VDD CONTROL

IC961 PAJ001A

1 GND
2 VDD1
3 RSTIN
4 VDD2
5 BSENS
6 ASENS
7 RSTOUT
VCC 14
IN2 13
IN1 12
MUTE 11
NC 10
IN3 9
CT1 8

A SENSE
B SENSE
RESET
VDD POWER

IC971 PA2023A

1 NC
3 AM+B
5 SYS+B
7 FM+B
9 TUN+B
11 MUTE
STBY 2
PREVCC 4
PWVCC 6
PWGND 8
PREGND 10
SELECT 12

TUNER/SYSTEM +B POWER SUPPLY

CN601

VLCD
DSENS
KYDT
DPDT
VDD
ILM+B
ILMGND
GND
NC

TO KEY BOARD UNIT CN901

NOTE.

Symbol indicates a resistor.
No differentiation is made between chip resistors and discrete resistors.

Symbol indicates a capacitor.
No differentiation is made between chip capacitors and discrete capacitors.

Decimal points for resistor and capacitor fixed values are expressed as:
2.2→2R2
0.022→R022

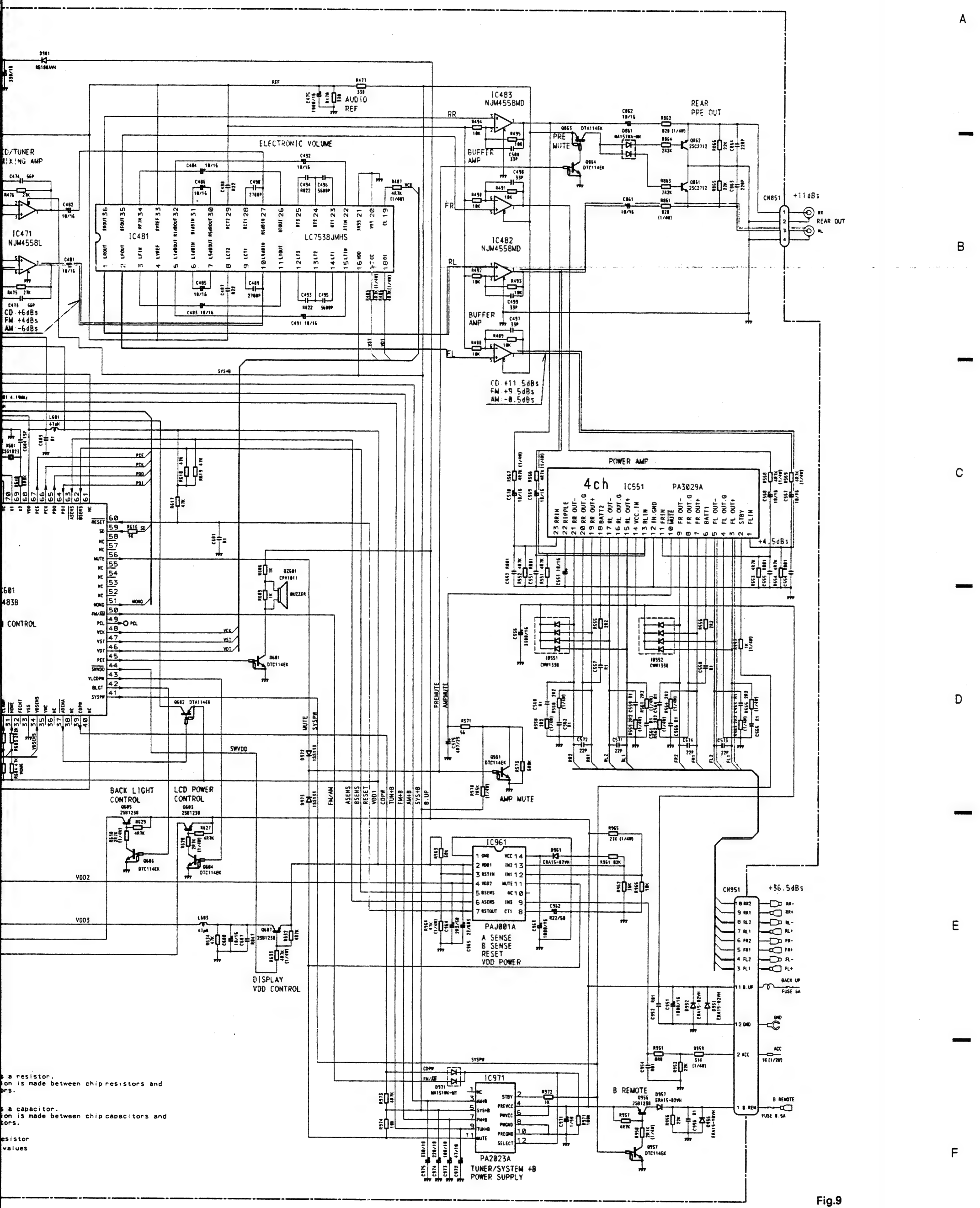
IC481
LC7538JMHS
ELECTRONIC VOLUME
AUDIO REF
IC483
NJM4558MD
IC482
NJM4558MD
IC471
NJM4558L
BUFFER AMP
PRE MUTE
REAR PRE OUT
CN851
+11dBs
REAR OUT
CD +6dBs
FM +4dBs
AM -6dBs
CD +11.5dBs
FM +5.5dBs
AM -0.5dBs
POWER AMP
4ch IC551 PA3029A
+4.5dBs
IC601
483B
CONTROL
BUZZER
BZ601
CPV1011
Q601
DTC114EK
Q602 DTA114EK
BACK LIGHT CONTROL
LCD POWER CONTROL
DISPLAY VDD CONTROL
AMP MUTE
IC961
PAJ001A
A SENSE
B SENSE
RESET
VDD POWER
IC971
PA2023A
TUNER/SYSTEM +B POWER SUPPLY
CN951
+36.5dBs
BACK UP
FUSE 6A
B REMOTE
FUSE 0.5A
a resistor.
ion is made between chip resistors and
ors.
a capacitor.
ion is made between chip capacitors and
tors.
esistor
values

Fig.9

4.2 TUNER AMP UNIT(DEH-505SDK,405SDK)

● **Circuit Diagram**

TUNER AMP UNIT(CWX1649)・・・・DEH-505SDK/TUNER AMP UNIT(CWX1650)・・・DEH-405SDK

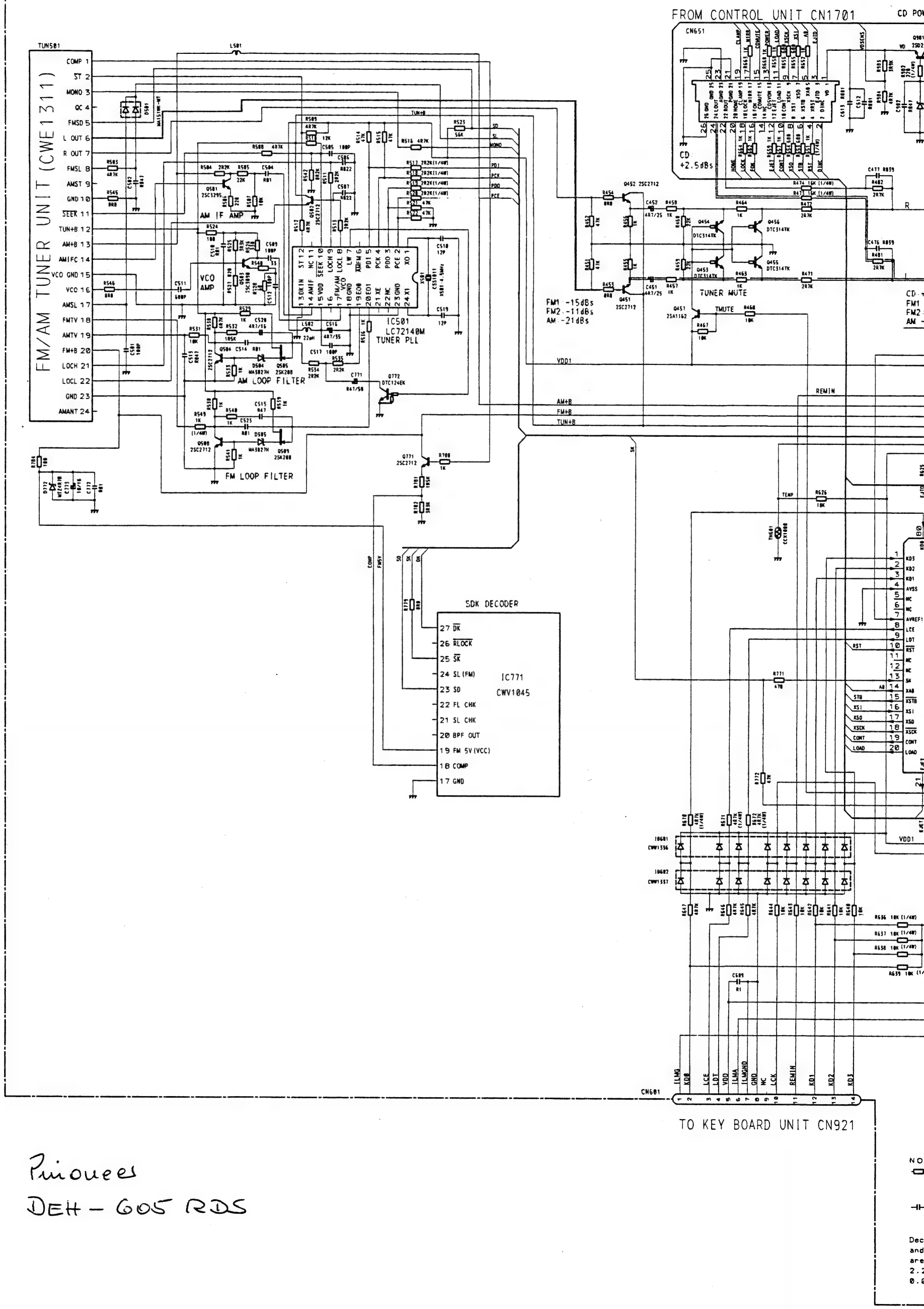

Pioneer

DEH-605RDS

2-18

FROM CONTROL UNIT CN1701

CD POWER SUPPLY

CN651

CD +2.5dBs

IC481 LC7538JMHS ELECTRONIC VOLUME

CD/TUNER MIXING AMP

IC471 NJM4558L

IC483 NJM4558MD

IC482 NJM4558MD

BUFFER AMP

RR FR RL FL

CD:+11.5dBs FM:+9.5dBs AM:-0.5dBs

CD:+2.5dBs FM:-15dBs FM2:-11dBs AM:-21dBs

CD +6dBs FM:+4dBs AM:-6dBs

FM1:-15dBs FM2:-11dBs AM:-21dBs

TUNER MUTE

IC601 PDR009B SYSTEM CONTROL

X601 4.19MHz

	DEH-505SDK	DEH-405SDK
R609	VACANT	0R0
R613	47K	VACANT

BZ601 CPV1011 BUZZER

AMP MUTE

IC961 PAJ001A

A SENSE
B SENSE
RESET
VDD POWER

IC971 PA2023A

TUNER/SYSTEM +B POWER SUPPLY

AMBER ILLUMI ILLUMI CONTROL

GREEN ILLUMI CONTROL

DISPLAY VDD CONTROL

CN601

TO KEY BOARD UNIT CN921

NOTE:

Symbol indicates a resistor. No differentiation is made between chip resistors and discrete resistors.

Symbol indicates a capacitor. No differentiation is made between chip capacitors and discrete capacitors.

Decimal points for resistor and capacitor fixed values are expressed as:
2.2→2R2
0.022→R022

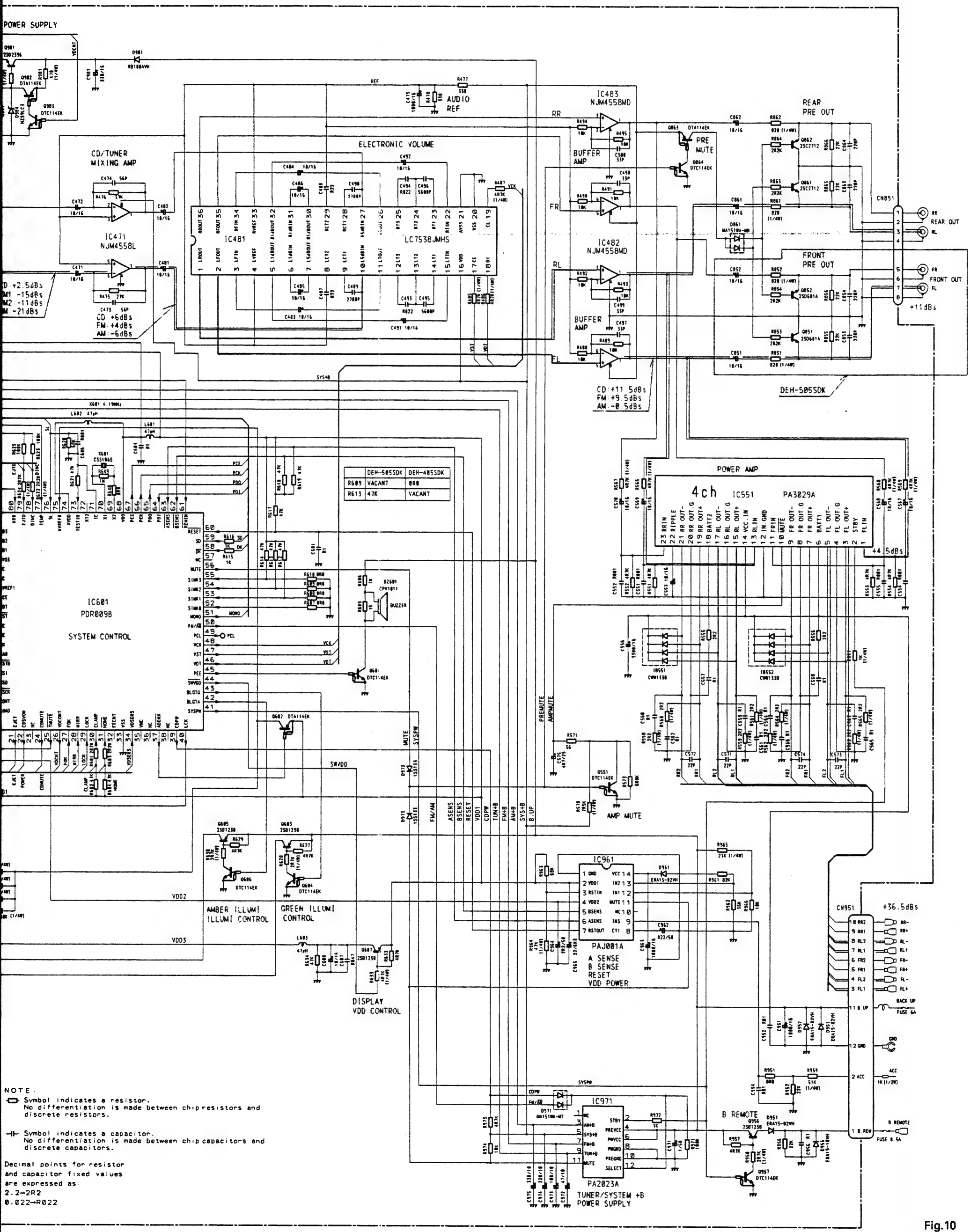

	DEH-505SDK	DEH-405SDK
R609	VACANT	0R0
R613	47K	VACANT

NOTE:

Symbol indicates a resistor.
No differentiation is made between chip resistors and discrete resistors.

Symbol indicates a capacitor.
No differentiation is made between chip capacitors and discrete capacitors.

Decimal points for resistor and capacitor fixed values are expressed as:
2.2→2R2
0.022→R022

Fig.10

● **Connection Diagram**

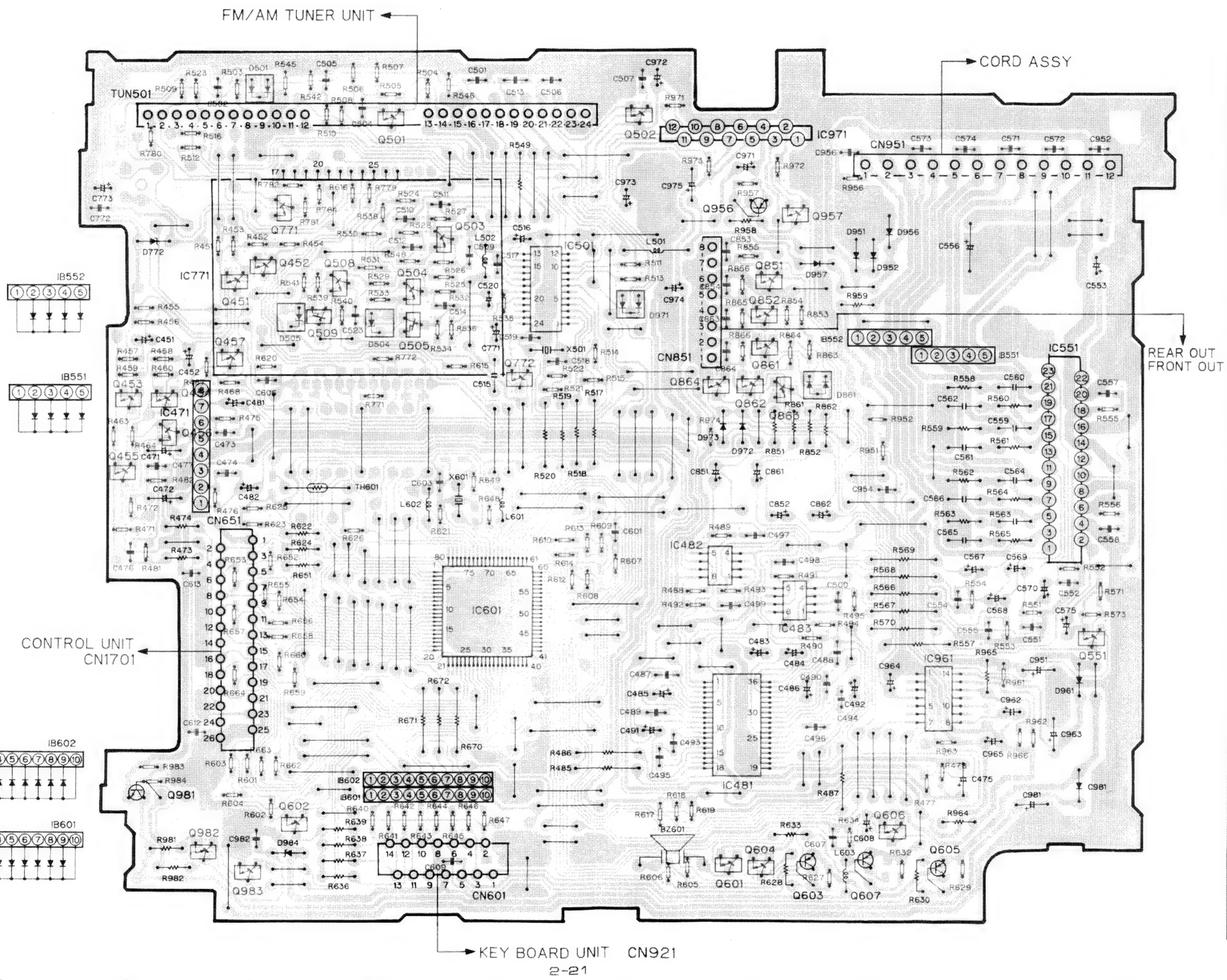

IC. Q	
Q501 Q502 IC971	A
Q771 Q956 Q957	—
Q503	
Q452 IC501	
IC771 Q451 Q508 Q504 Q851	
Q509 Q505 Q852	
Q861 Q457 Q772	B
Q864 Q862 Q863 Q453 Q454	
Q456	
Q455 IC551 IC471	—
IC482	
IC601 IC483	C
Q551	
IC961	
IC481	—
Q981	
Q602 Q606	
Q982	D
Q983 Q601 Q604 Q603 Q607 Q605	

Fig.1 1

2-22

4.3 TUNER AMP UNIT(DEH-505,405)

● Connection Diagram

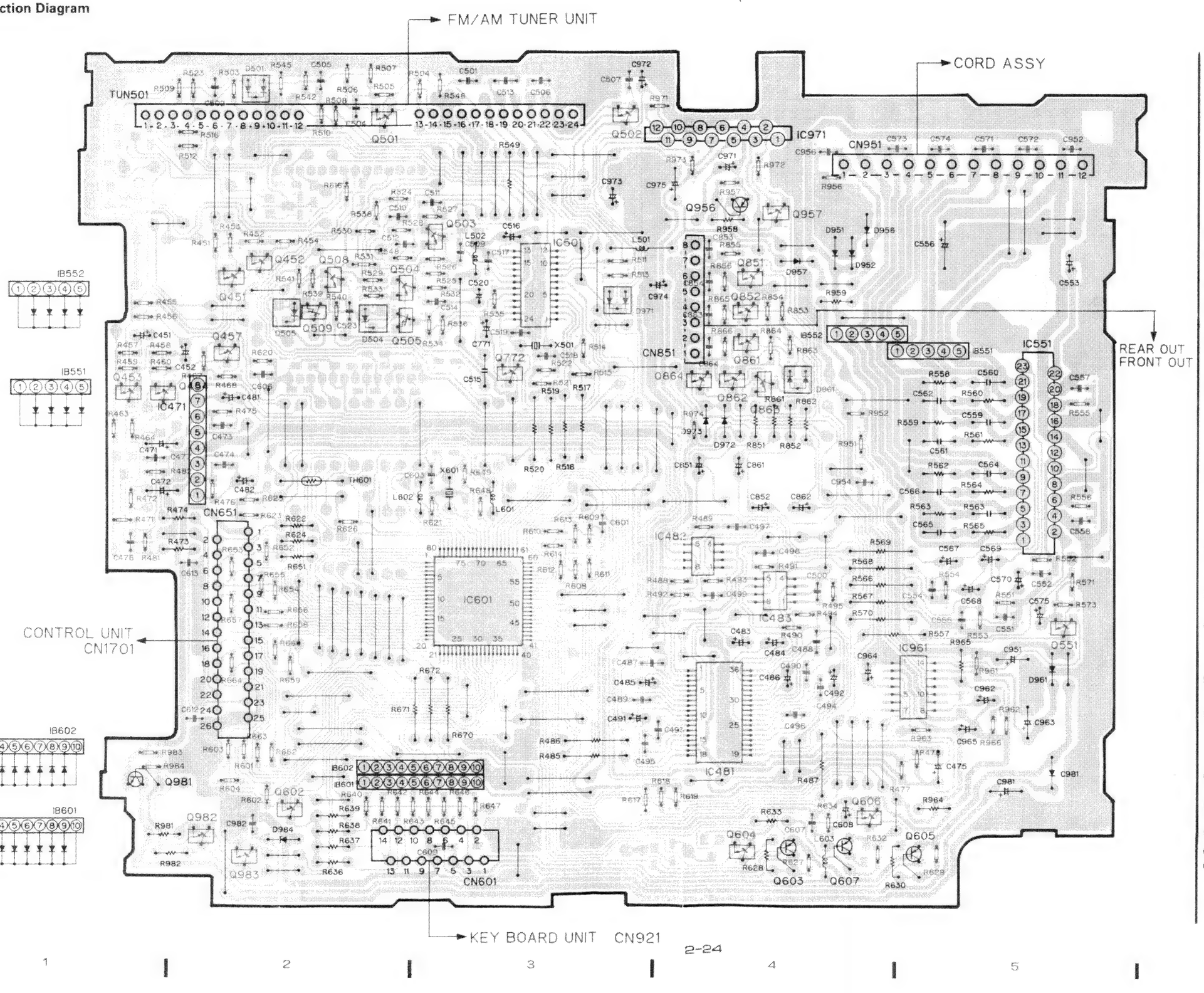

IC, Q

Q501 Q502
IC971

Q956 Q957
Q503
Q452 IC501
Q451 Q508
Q504 Q851
Q509 Q505 Q852
Q861
Q457 Q772
Q864 Q862 Q863
Q453 Q454

IC551
IC471

IC482

IC601 IC483

Q551

IC961

IC481

Q981

Q602 Q606

Q982
Q983 Q604
Q603 Q607 Q605

Fig.12

● Circuit Diagram

TUNER AMP UNIT(CWX1651)····DEH-505 /TUNER AMP UNIT(CWX1652)····DEH-405

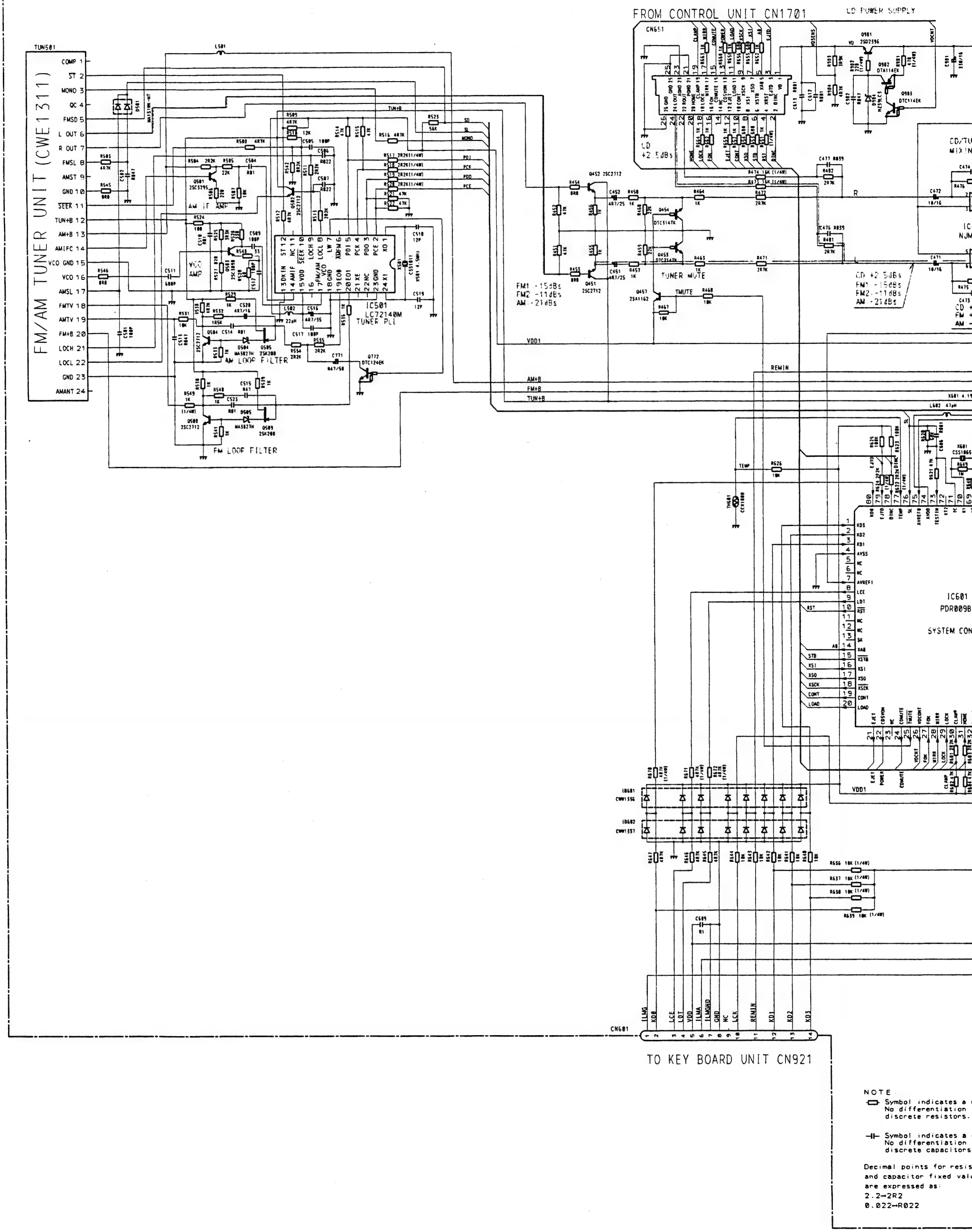

NOTE:

Symbol indicates a
No differentiation
discrete resistors.

Symbol indicates a
No differentiation
discrete capacitors

Decimal points for resis
and capacitor fixed valu
are expressed as:
2.2→2R2
0.022→R022

FROM CONTROL UNIT CN1701

CD POWER SUPPLY

CN651

CD +2.5dBs

IC471 NJM4558L

CD/TUNER MIXING AMP

CD +2.5dBs
FM1 -15dBs
FM2 -11dBs
AM -21dBs

CD +6dBs
FM +4dBs
AM -6dBs

IC481 LC7538JMHS

ELECTRONIC VOLUME

AUDIO REF

IC483 NJM4558MD

IC482 NJM4558MD

BUFFER AMP

PRE MUTE

TUNER MUTE

TMUTE

CD +11.5dBs
FM +9.5dBs
AM -0.5dBs

IC601
PDR009B
SYSTEM CONTROL

X601 4.19MHz

	DEH-505	DEH-405
R609	VACANT	0R0
R613	47K	VACANT

POWER AMP

4ch IC551

IC961 PAJ001A
A SENSE
B SENSE
RESET
VDD POWER

IC971 PA2023A
TUNER/SYSTEM +8
POWER SUPPLY

AMP MUTE

B REMOTE

AMBER ILLUMI
ILLUMI CONTROL

GREEN ILLUMI
CONTROL

DISPLAY
VDD CONTROL

TO KEY BOARD UNIT CN921

NOTE
- Symbol indicates a resistor. No differentiation is made between chip resistors and discrete resistors.
- Symbol indicates a capacitor. No differentiation is made between chip capacitors and discrete capacitors.

Decimal points for resistor and capacitor fixed values are expressed as:
2.2→2R2
0.022→R022

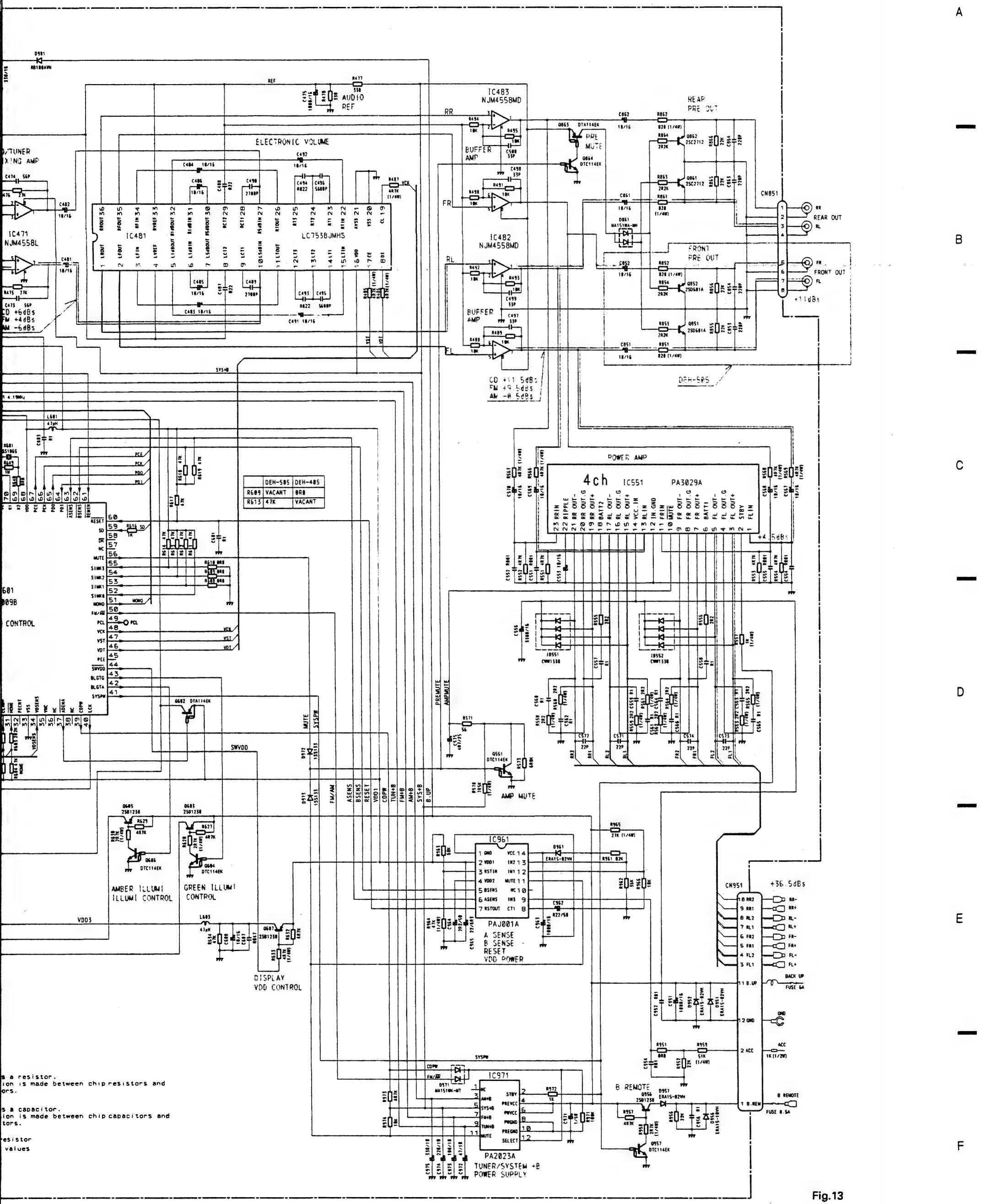

	DEH-585	DEH-485
R609	VACANT	0R0
R613	47K	VACANT

Fig.13

Pioneer

4.4 CD MECHANISM MODULE

● Circuit Diagram

SL SIGNAL LINE
F FOCUS SERVO LINE
T TRACKING SERVO LINE
C CARRIAGE SERVO LINE
S SPINDLE SERVO LINE

CONTROL UNIT

PU UNIT(CGY1031)

RF AMP/AUTO POWER CONTROL

IC1001 UPC2571GS

CN1001

DETECTOR P.C.BOARD

CD DRIVER

IC1301 PA3026

LOADING DRIVER

IC1302 XRA6285FP

IC1303 NJM4558M

NOTE:

⊏⊐ Symbol indicates a resistor.
No differentiation is made between chip resistors and discrete resistors.

⊣⊢ Symbol indicates a capacitor.
No differentiation is made between chip capacitors and discrete capacitors.

Decimal points f
and capacitor fi
are expressed as
2.2→2R2
0.022→R022

IC1201
UPD63700GF
FOCUS/TRACKING
CARRIAGE/SPINDLE
DIGITAL SERVO
DIGITAL SIGNAL
PROCESSOR

D/A
CONVERTER

IC1601 TC9268F

LOW-PASS
FILTER

IC1602 TA2063F

CD DRIVER

IC1301 PA3026

REGULATOR

IC1701 PQ05TZ51

AGND
DGND
+5VA
+5VD
+5V
GND
BVD
VD
VM
V+5
PGND

SWITCHES
MISCELLANEOUS
S1801 HOME SWITCH ..... ON-OFF
S1802 CLAMP SWITCH ..... ON-OFF
The underlined indicates the switch position.

NOTE:

⊏⊐ Symbol indicates a resistor.
No differentiation is made between chip resistors and discrete resistors.

⊣⊢ Symbol indicates a capacitor.
No differentiation is made between chip capacitors and discrete capacitors.

Decimal points for resistor and capacitor fixed values are expressed as:
2.2→2R2
0.022→R022

IC1201
UPD63700GF
FOCUS/TRACKING
CARRIAGE/SPINDLE
DIGITAL SERVO
DIGITAL SIGNAL
PROCESSOR

IC1601 TC9268F

D/A
CONVERTER

IC1602 TA2063F

LOW-PASS
FILTER

IC1701 PQ05TZ51

REGULATOR

+5VD

BVD

VD

VM

V+5

GND

PGND

CN1701
1 VD
2 DINC
3 EJTD
4 XRST
5 XA0
6 XSTB
7 XSO
8 XSI
9 XSCK
10 CONT
11 LOAD
12 EJET
13 CD5VON
14 NC
15 CDMUTE
16 FOK
17 MIRR
18 LOCK
19 CLAMP
20 HOME
21 PGND
22 ROUT
23 AGND
24 LOUT
25 GND
26 GND

→ TUNER AMP UNIT
CN651

SWITCHES
MISCELLANEOUS
S1801 HOME SWITCH ..... ON-OFF
S1802 CLAMP SWITCH ..... ON-OFF
The underlined indicates the switch position.

Fig.14

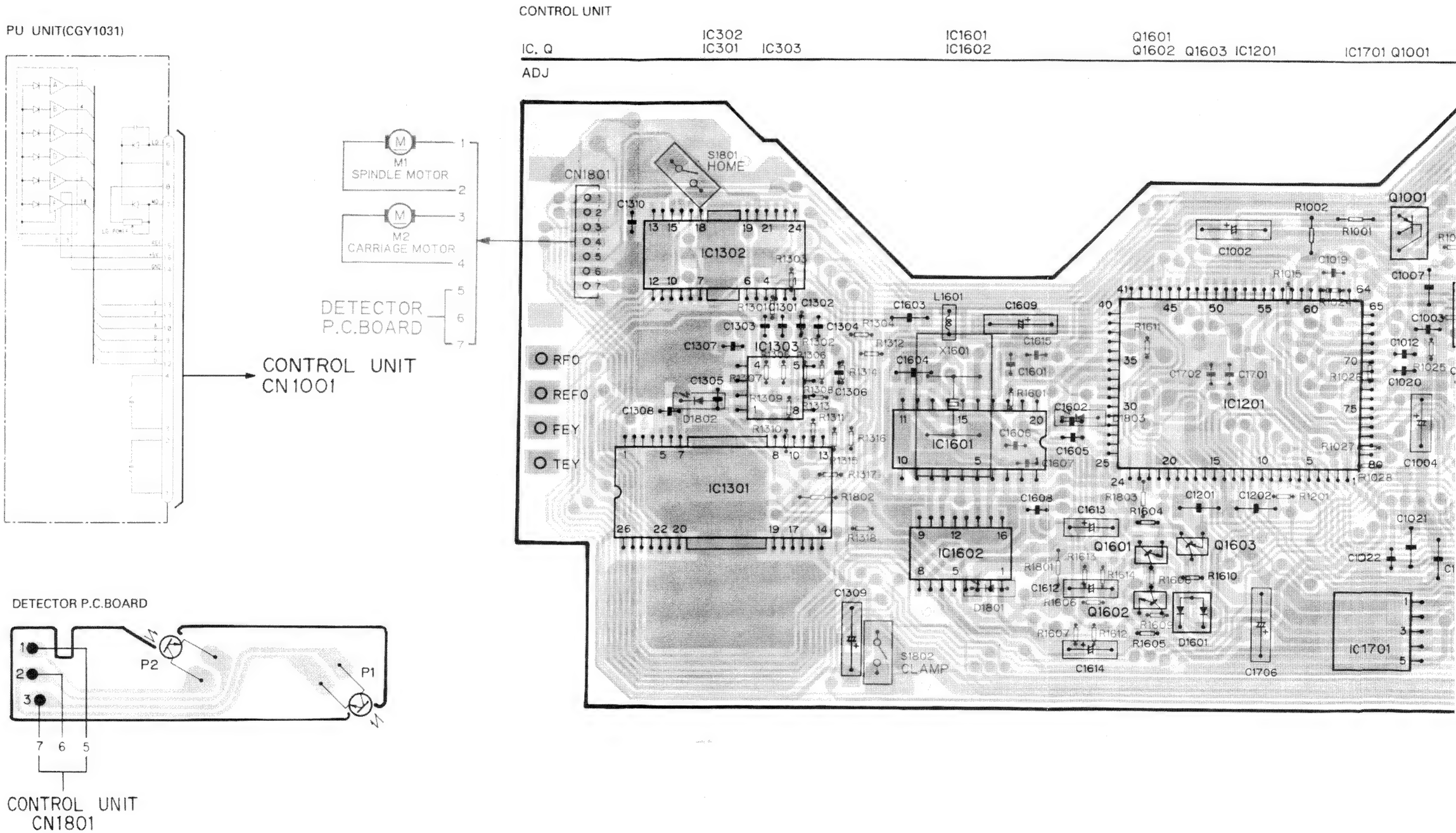
PU UNIT(CGY1031)
CONTROL UNIT
CN1001
M1
SPINDLE MOTOR
M2
CARRIAGE MOTOR
DETECTOR
P.C.BOARD
CONTROL UNIT
IC. Q
ADJ
IC302
IC301
IC303
IC1601
IC1602
Q1601
Q1602
Q1603
IC1201
IC1701
Q1001
CN1801
S1801
HOME
IC1302
IC1303
IC1301
IC1601
IC1602
IC1201
IC1701
RFO
REFO
FEY
TEY
S1802
CLAMP
DETECTOR P.C.BOARD
P2
P1
CONTROL UNIT
CN1801

CONTROL UNIT

IC. Q — IC302 IC301 IC303 — IC1601 IC1602 — Q1601 Q1602 Q1603 IC1201 — IC1701 Q1001 — IC1001

ADJ — VR1003 VR1002 VR1001 VR1004

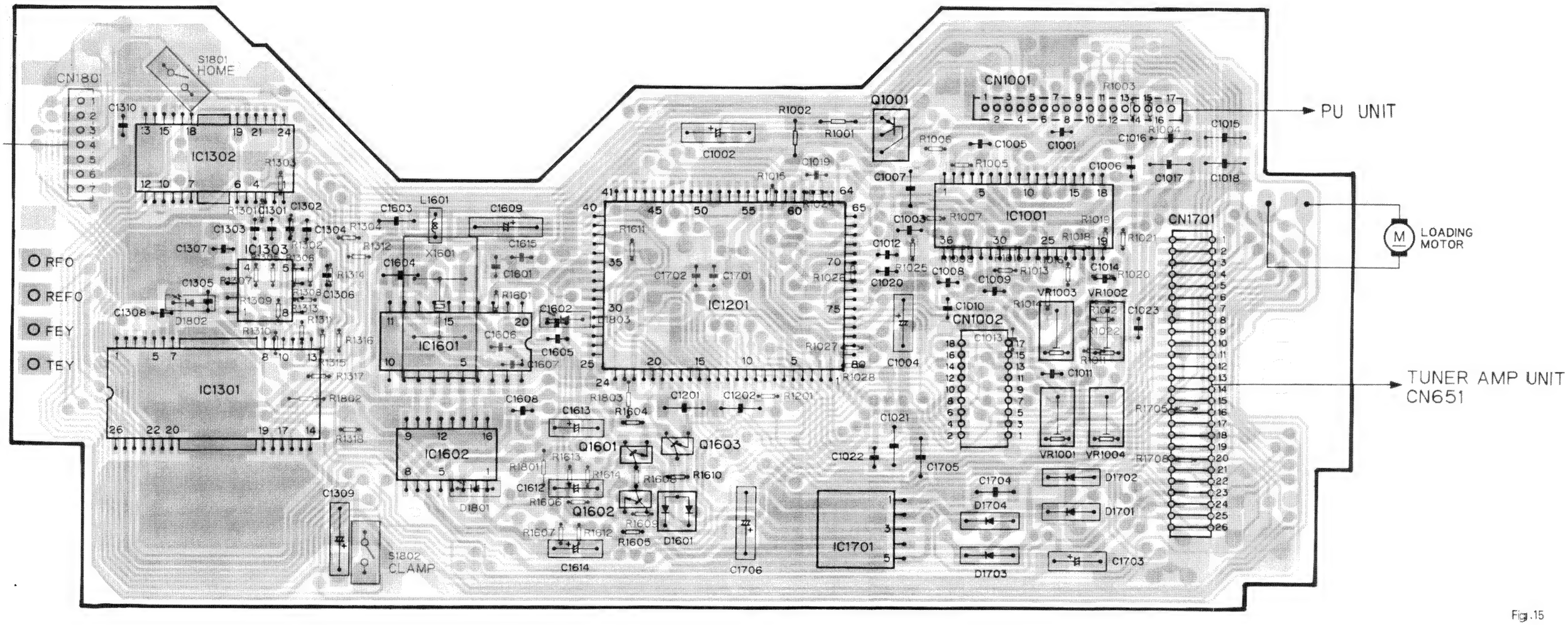

Fig.15

● Waveforms

Note: 1. The encircled numbers denote measuring pointes in the circuit diagram.
2. Reference voltage
REFO: 2.5V

① RFO 0.5V/div. 0.2µs/div.
Normal mode: play

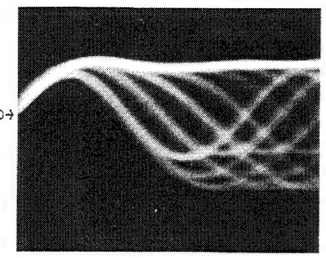

① CH1: RFO 1V/div.
② CH2: MIRR 5V/div. 0.5ms/div.
Test mode: Tracking open

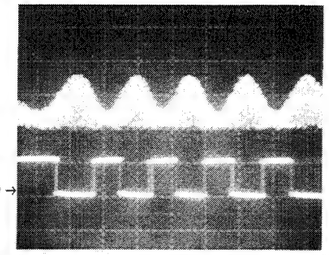

① CH1: RFO 1V/div.
② CH2: MIRR 5V/div. 0.5ms/div.
Normal mode: The defect part passes 800µm.

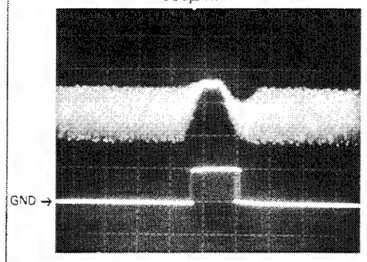

③ CH1: FIN 0.5V/div.
④ CH2: FO+ 2V/div. 0.2s/div.
Test mode: No disc, Focus close

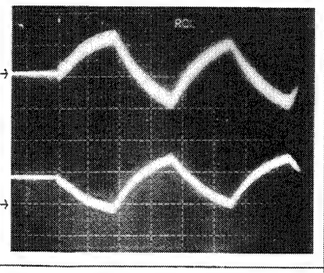

③ CH1: FIN 0.5V/div.
⑤ CH2: FOK 2V/div. 0.2s/div.
Normal mode: Focus close

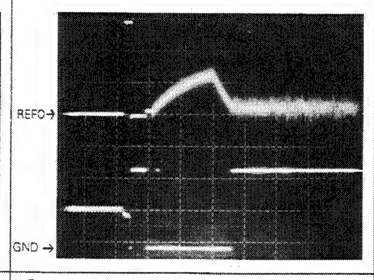

⑥ CH1: FEY 0.5V/div.
⑦ CH2: XSO 2V/div. 1ms/div.
Normal mode: Focus close

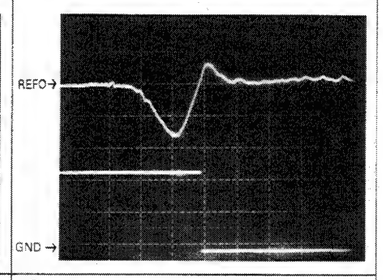

⑧ CH1: TEY 0.5V/div.
⑨ CH2: TIN 0.5V/div. 0.5ms/div.
Test mode: 32 track jump (FWD)

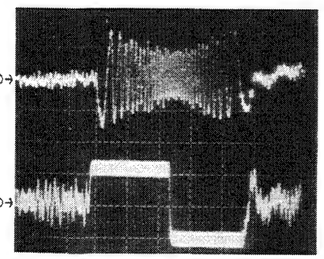

⑧ CH1: TEY 0.5V/div.
⑨ CH2: TIN 0.5V/div. 0.5ms/div.
Test mode: Single jump (FWD)

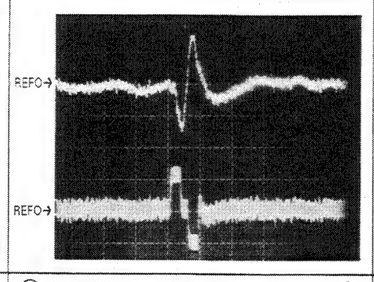

⑧ CH1: TEY 0.5V/div.
⑨ CH2: TIN 0.5V/div. 5ms/div.
Test mode: 100 track jump (FWD)

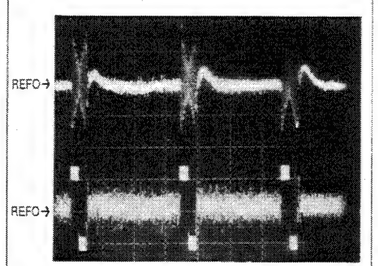

⑥ CH1: FEY 0.2V/div.
③ CH2: FIN 0.5V/div. 20ms/div.
Normal mode: Play

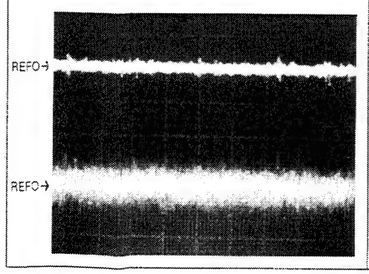

③ CH1: FIN 0.5V/div.
⑩ CH2: SIN 1V/div. 0.5s/div.
Normal mode: Focus close (12cm)

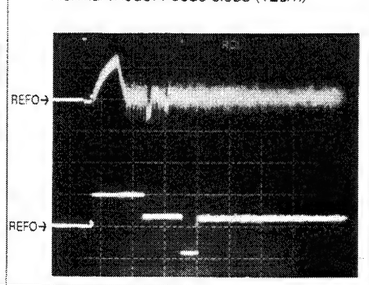

③ CH1: FIN 0.5V/div.
⑩ CH2: SIN 1V/div. 0.5s/div.
Normal mode: Focus close (8cm)

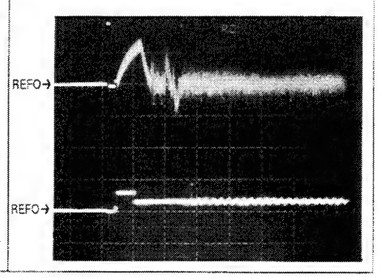

⑧ CH1: TEY 0.5V/div.
⑨ CH2: TIN 0.5V/div. 20ms/div.
Normal mode: Play

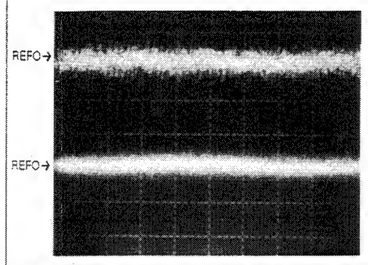

⑧ CH1: TEY 0.5V/div.
㉓ CH2: CIN 0.5V/div. 5ms/div.
Test mode: 100 track jump (FWO)

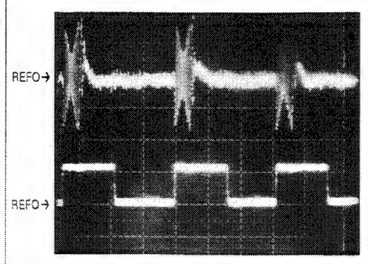

⑩ SIN 0.5V/div. 50ms/div.
Normal mode: 1Play (12cm disc)

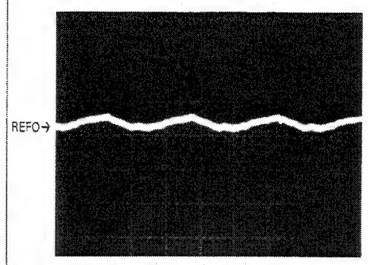

⑩ SIN 0.5V/div. 10ms/div.
Search (12cm disc)

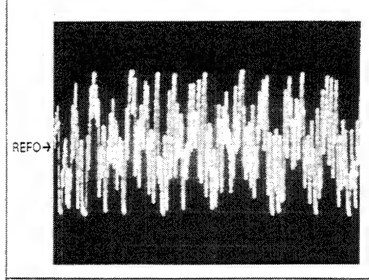

⑪ EFM 2V/div. 5µs/div.
Play

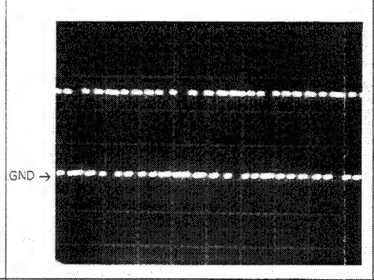

⑧ CH1: TEY 1V/div.
⑫ CH2: TEC 1V/div. 2ms/div.
Test mode: Focus closed
Tracking open

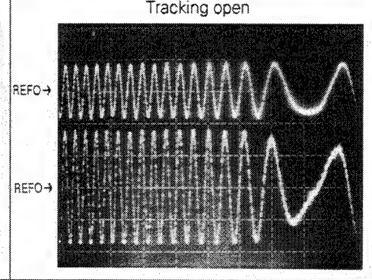

⑧ CH1: TEY 0.5V/div.
⑥ CH2: FEY 0.5V/div. 0.1s/div.
Normal mode: AGC after focus close

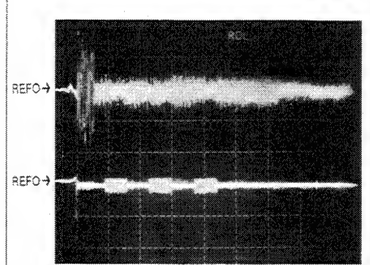

⑮ PLCK 2V/div. 0.5µs/div.
Play

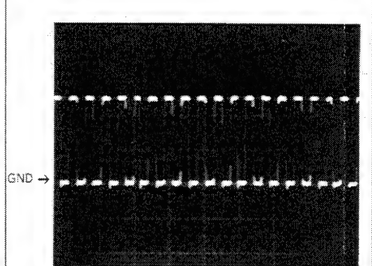

⑯ SCKO 2V/div. 1µs/div.
Play

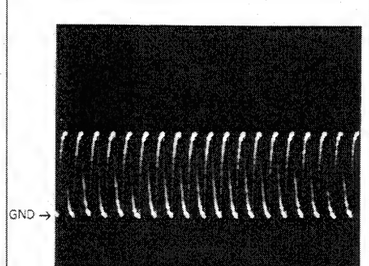

⑰ Dout 2V/div. 10µs/div.
Play

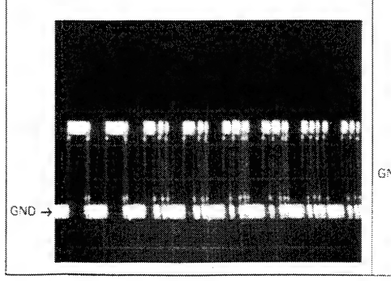

⑱ LRCK 2V/div. 20µs/div.
Play

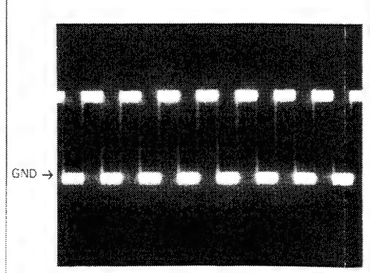

⑲ VD 5V/div. 50ms/div.
Normal mode: No disc

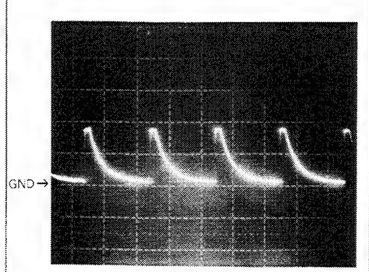

㉒ CH1: R OUT 1
㉑ CH2: L OUT 1
Normal mode: Pl

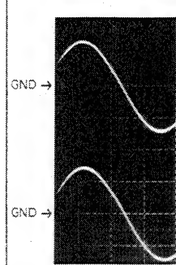

ram.

ns/div.
isses

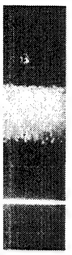

/div.

/div.
)

div.

⑧ CH1: TEY 0.5V/div. 20ms/div.
⑨ CH2: TIN 0.5V/div.
Normal mode: Play

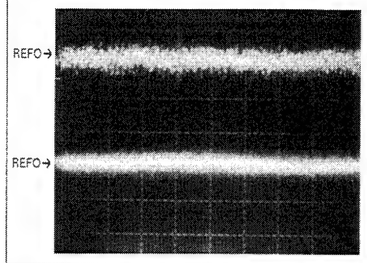

⑧ CH1: TEY 0.5V/div. 5ms/div.
㉓ CH2: CIN 0.5V/div.
Test mode: 100 track jump (FWO)

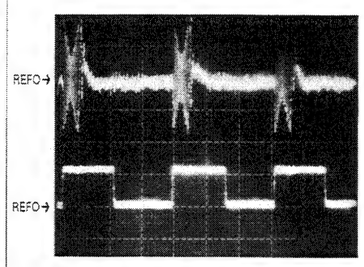

⑩ SIN 0.5V/div. 50ms/div.
Normal mode: 1Play (12cm disc)

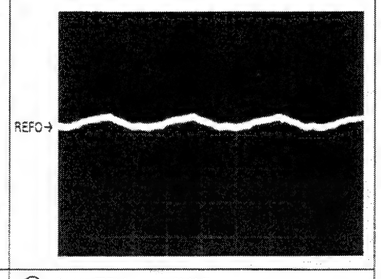

⑩ SIN 0.5V/div. 10ms/div.
Search (12cm disc)

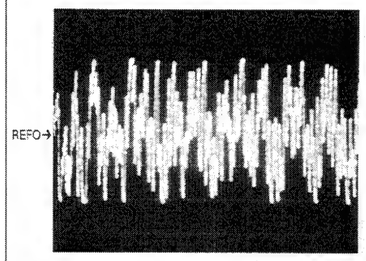

⑪ EFM 2V/div. 5μs/div.
Play

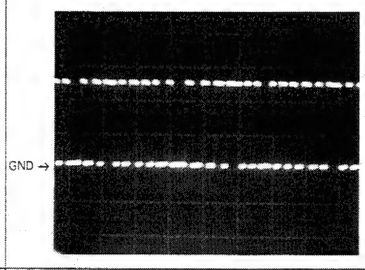

⑧ CH1: TEY 1V/div. 2ms/div.
⑫ CH2: TEC 1V/div.
Test mode: Focus closed
Tracking open

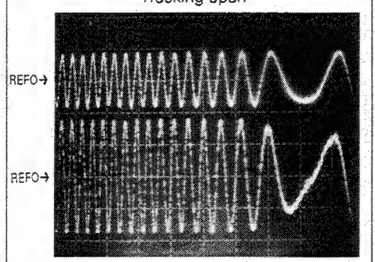

⑧ CH1: TEY 0.5V/div. 0.1s/div.
⑥ CH2: FEY 0.5V/div.
Normal mode: AGC after focus close

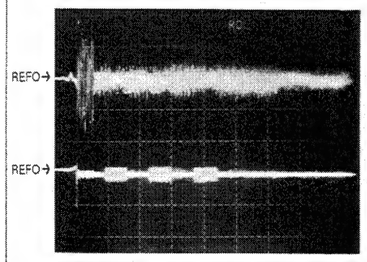

⑮ PLCK 2V/div. 0.5μs/div.
Play

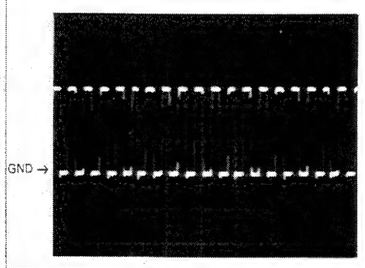

⑯ SCKO 2V/div. 1μs/div.
Play

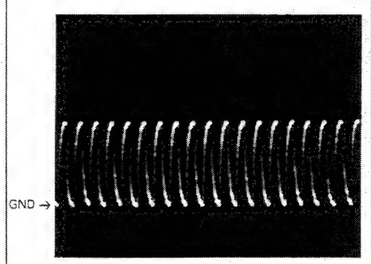

⑰ Dout 2V/div. 10μs/div.
Play

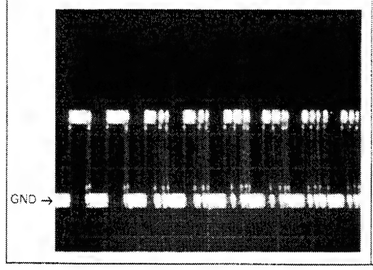

⑱ LRCK 2V/div. 20μs/div.
Play

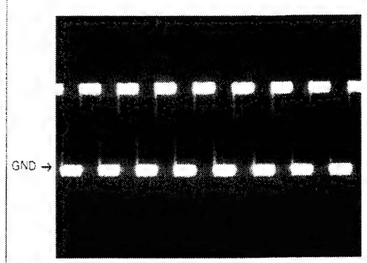

⑲ VD 5V/div. 50ms/div.
Normal mode: No disc

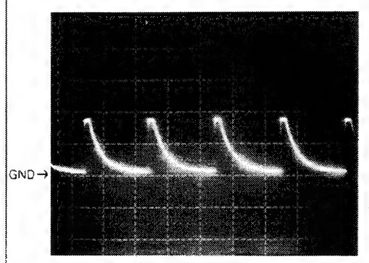

㉒ CH1: R OUT 1V/div. 0.2ms/div.
㉑ CH2: L OUT 1V/div.
Normal mode: Play (1kHz 0dB)

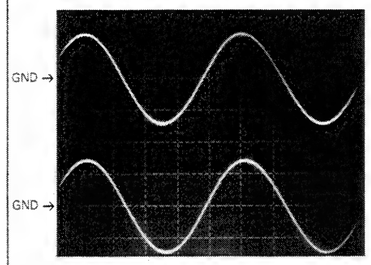

⑥ CH1: FEY 1V/div. 1ms/div.
③ CH2: FIN 1V/div.
Normal mode: During AGC

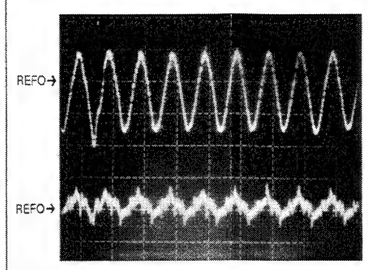

⑧ CH1: TEY 0.2V/div. 1ms/div.
⑨ CH2: TIN 0.5V/div.
Normal mode: During AGC

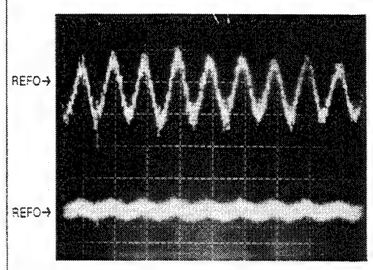

4.5 FM/AM TUNER UNIT

● Circuit Diagram

NOTE

Symbol indicates a resistor.
No differentiation is made between chip resistors and discrete resistors.

Symbol indicates a capacitor.
No differentiation is made between chip capacitors and discrete capacitors.

Decimal points for resistor and capacitor fixed values are expressed as
2.2→2R2
0.022→R022

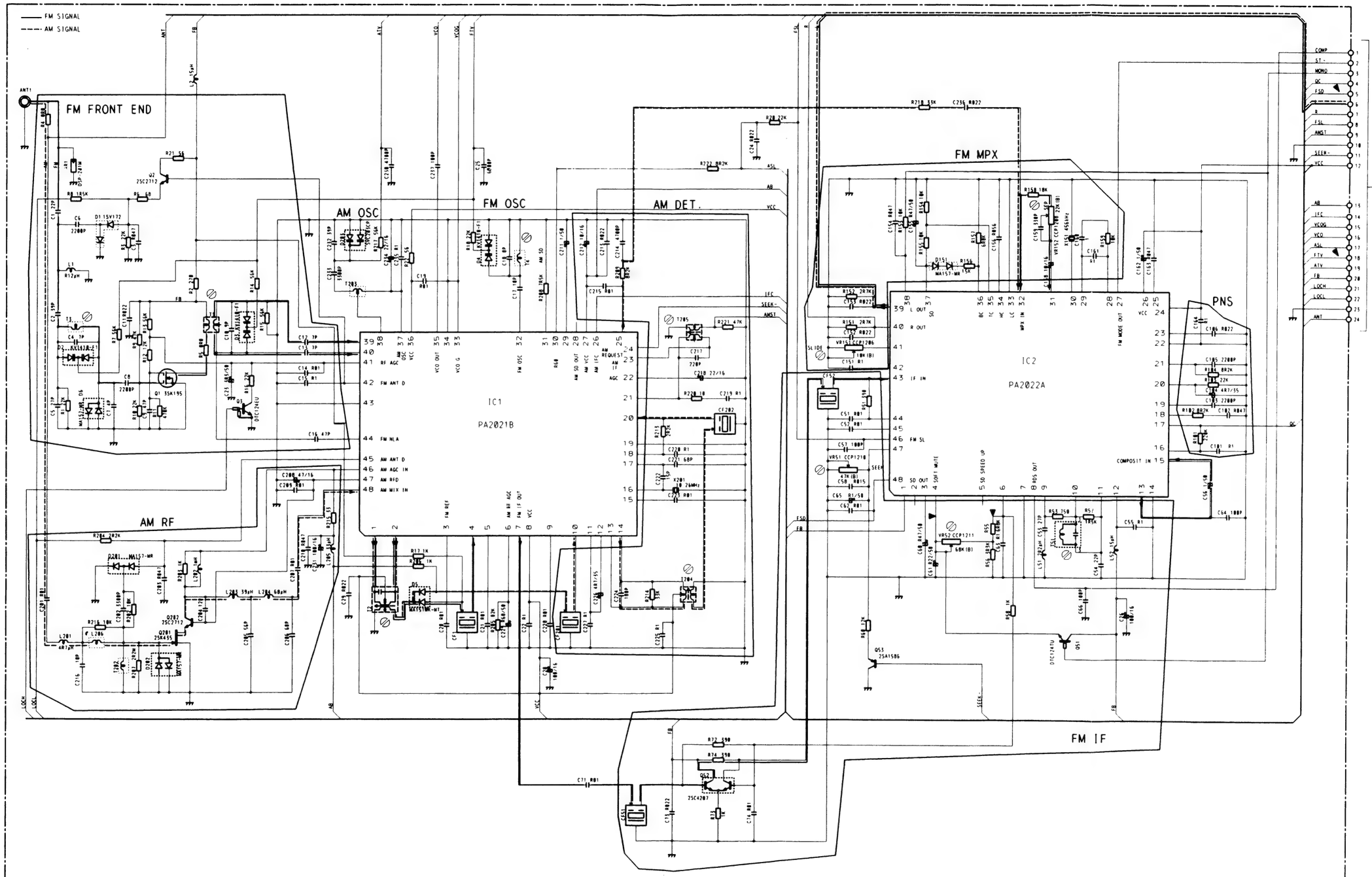

Fig.16

● **Connection Diagram**

IC. Q	Q201	Q3	Q202	Q1			Q2	IC1				Q52		Q53	Q51	IC2	
ADJ		T3			T1	T2					T4	T204	T205	VR51	VR52	VR151	VR152	T51

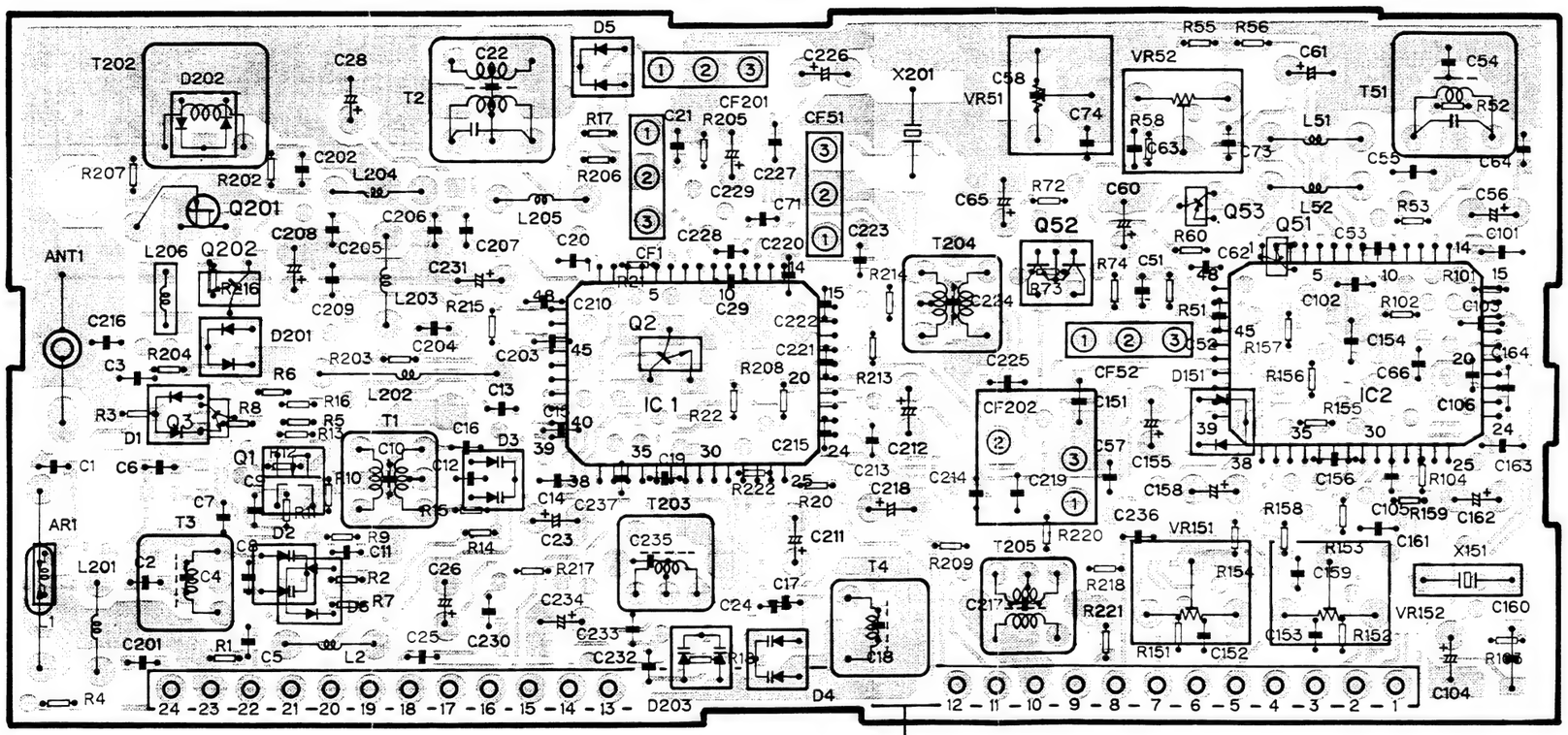

Fig.17

TUNER AMP UNIT

4.6 KEY BOARD UNIT(DEH-605RDS)

● **Circuit Diagram**

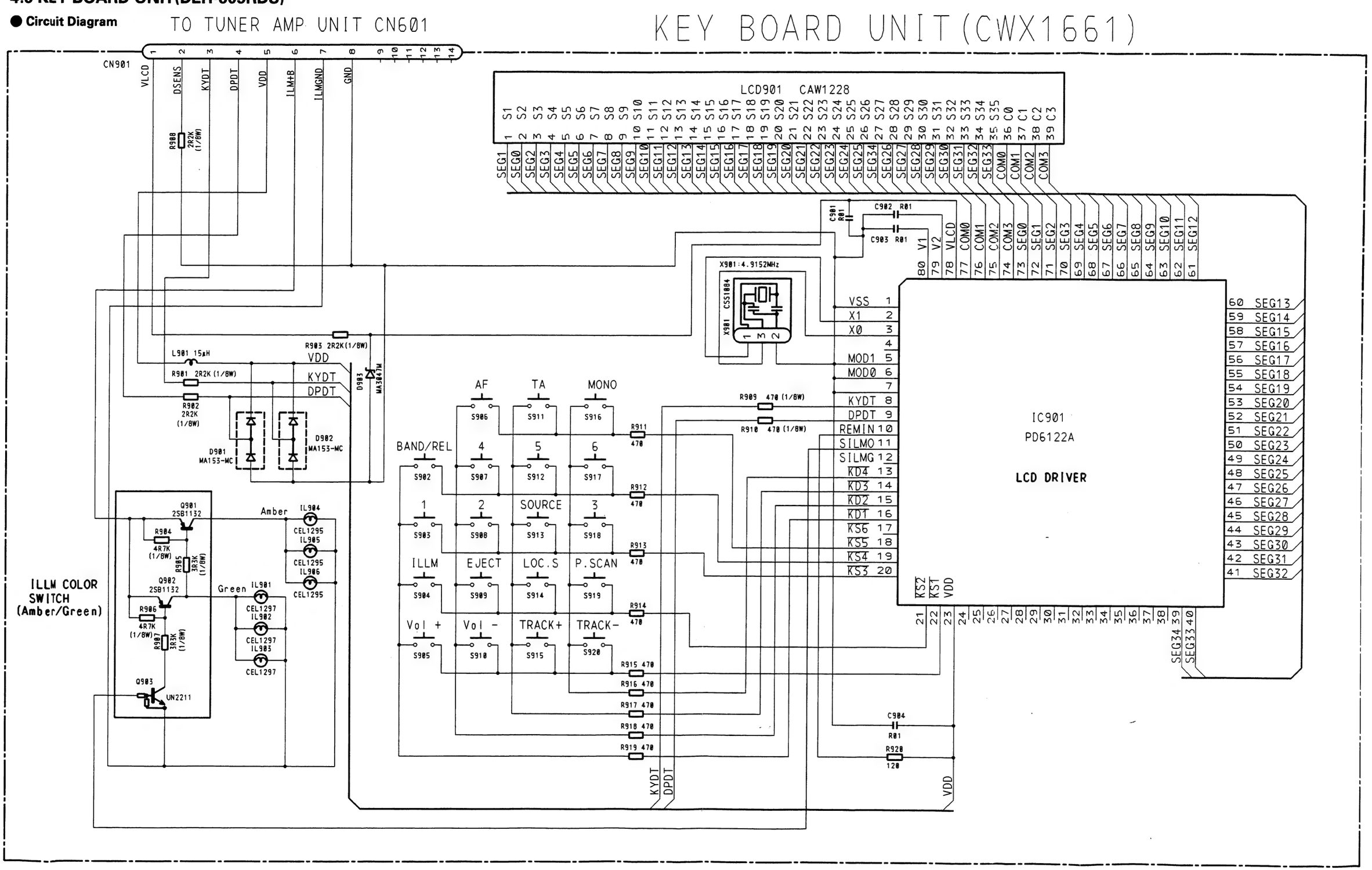

Fig.18

● **Connection Diagram**

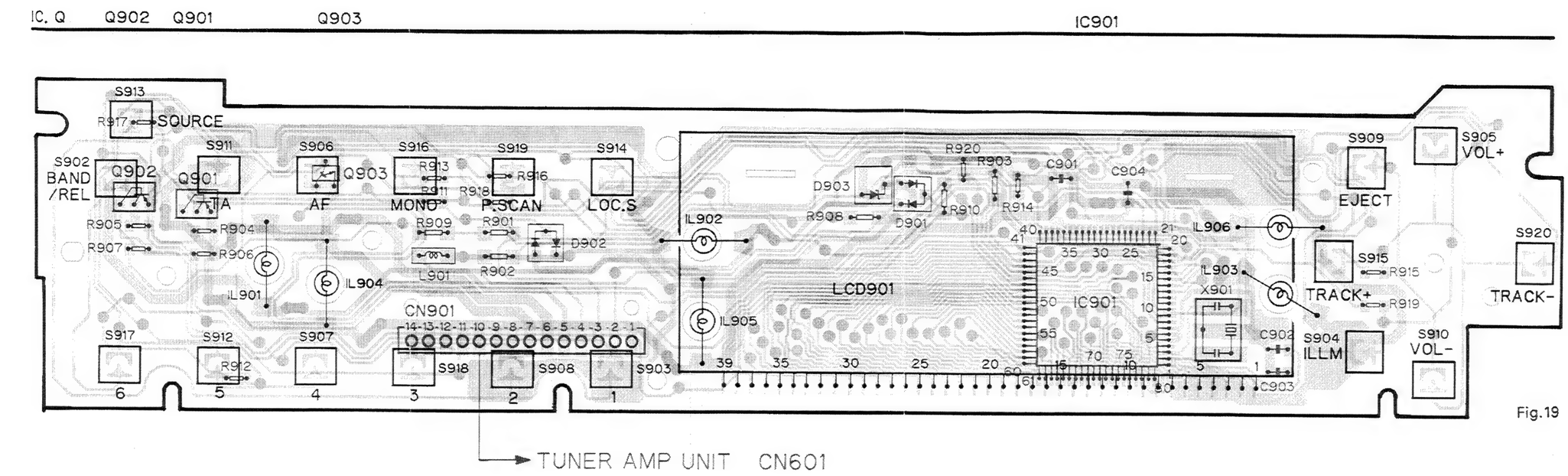

Fig.19

4.7 KEY BOARD UNIT(DEH-505SDK,505,405SDK,405)

● **Connection Diagram**

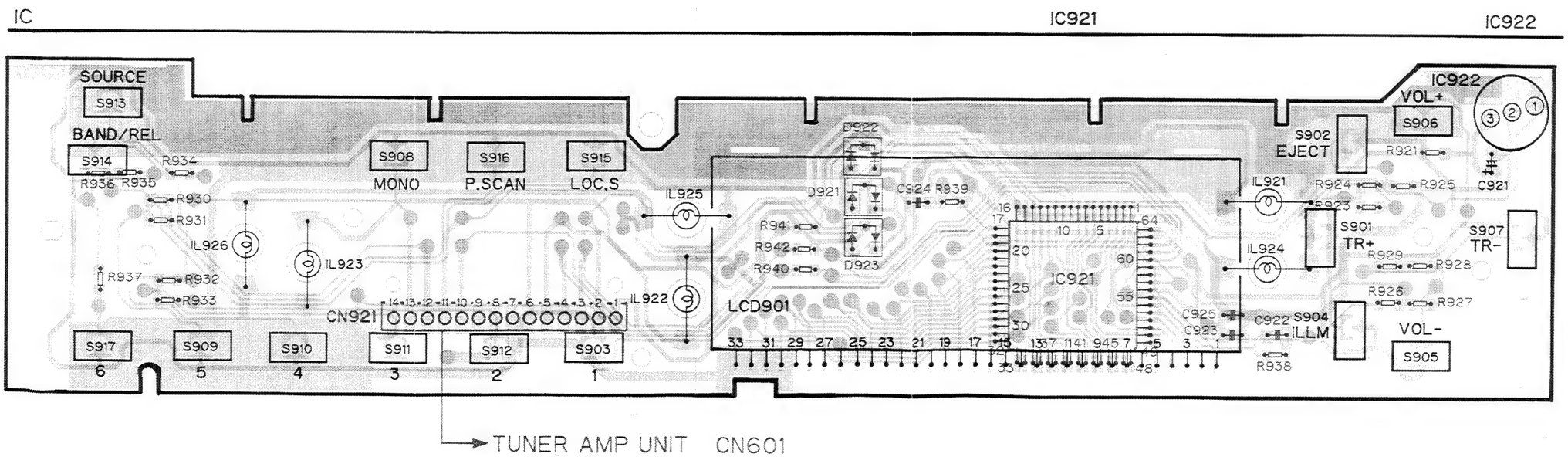

Fig.20

8 9 10 11 12

● **Circuit Diagram**

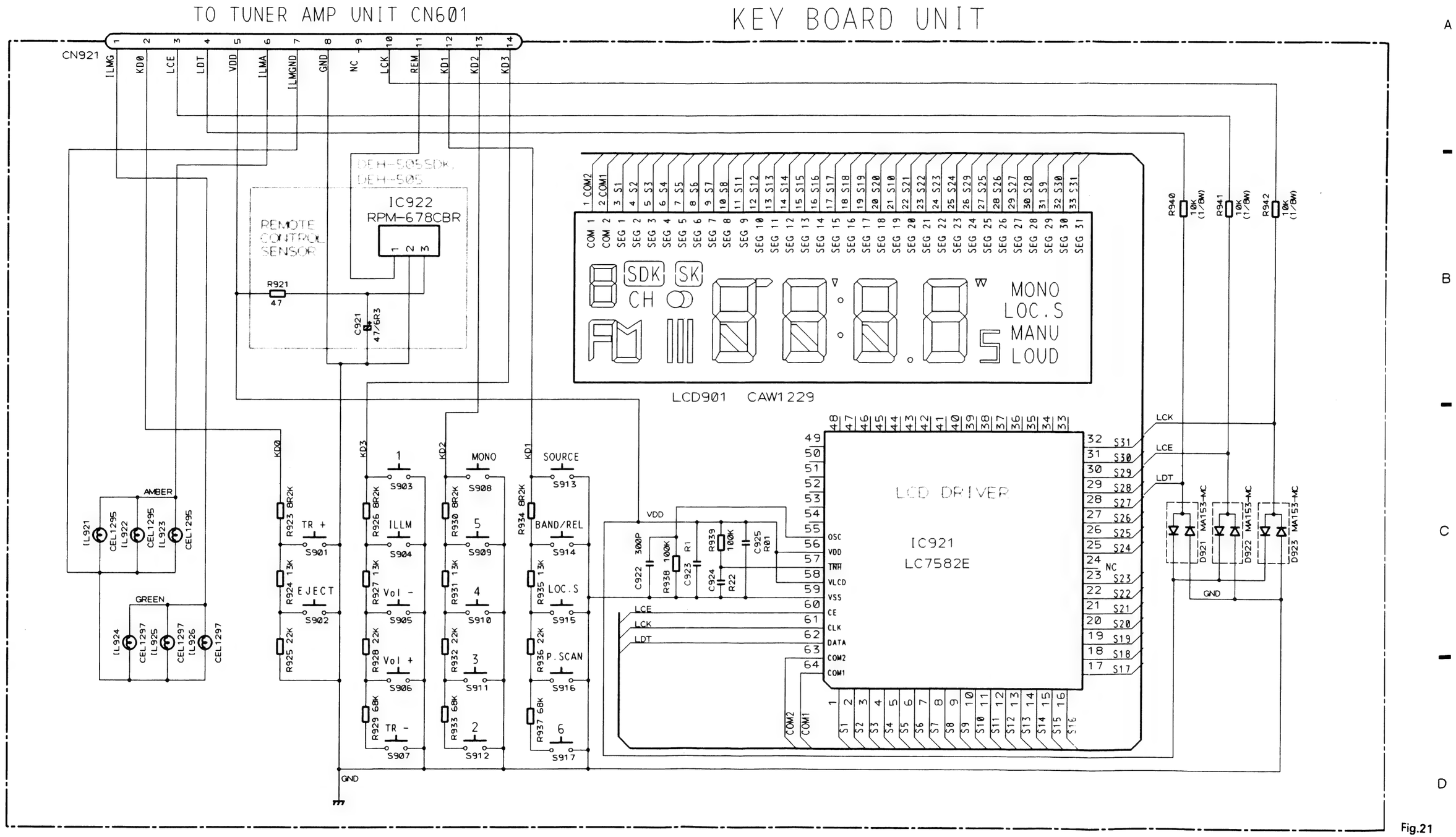

Fig.21

PIONEER
The Art of Entertainment

Service Manual

ORDER NO.
CRT1574

CD MECHANISM MODULE
CX-540

- **This service manual describes operation of the CD mechanism incroporated in models listed in the table below.**
- **When performing repairs use this manual together with the specific manual for model under repair.**

Model	Service Manual	CD Mechanism Module	CD Mechanism Unit
DEH-605RDS/EW,X1B/EW	CRT1563	CXK2810	CXA6475
DEH-505SDK/GR			
DEH-505/EW,X1B/EW			
DEH-405SDK/GR			
DEH-505/UC	CRT1570	CXK2800	CXA5970
DEH-503/ES			
DEH-45/UC			
DEH-405/UC			
DEH-305/US			
DEH-303/ES			
DEH-205/UC			
DEH-203/ES			

CONTENTS

1. CIRCUIT DESCRIPTION.....2
2. MECHANISM DESCRIPTION.....16
3. DISASSEMBLY.....19

PIONEER ELECTRONIC CORPORATION 4-1, Meguro 1-Chome, Meguro-ku, Tokyo 153, Japan
PIONEER ELECTRONICS SERVICE INC. P.O.Box 1760, Long Beach, California 90801 U.S.A.
PIONEER ELECTRONICS OF CANADA, INC. 300 Allstate Parkway Markham, Ontario L3R 0P2 Canada
PIONEER ELECTRONIC [EUROPE] N.V. Haven 1087 Keetberglaan 1, 9120 Melsele, Belgium
PIONEER ELECTRONICS AUSTRALIA PTY.LTD. 178-184 Boundary Road, Braeside, Victoria 3195, Australia TEL:[03]580-9911

© **PIONEER ELECTRONIC CORPORATION 1994**

K-FFK.FEB. 1994 Printed in Japan

1. CIRCUIT DESCRIPTION

1.1 PRE-AMPLIFIER STAGE (IC1001 UPC2571GS)

The optical signals are converted to voltage signals using an i/v amplifier inside the PU unit.

These voltage signals (A - F) are further processed by this pre-amp stage.

The pre-amplifier performs the following tasks

> Automatic power control of the PU unit's laser diode.

> Generation of an equalized RF signal from the photo-detector outputs (A - D).

> Generation of a focus error signal from the photo-detector outputs (A - D).

> Generation of a tracking error signal from the photo-detector outputs (E & F).

> Generation of a tracking zero crossing signal from the photo-detector outputs (E & F).

This IC runs from a single voltage supply (+5V). The reference voltage for this IC, the PU unit, and all the servo circuitry is REFO. This is obtained from pin 19 of the pre-amp ; which in turn is derived from the output REFOUT of the servo LSI, IC1201, UPD63700GF. The voltages REFOUT and REFO should be at +2.5V DC with respect to GND. All measurements and observations should be made using REFO as the reference as this is a buffered output. Care should be taken not to inadvertently short REFO to GND.

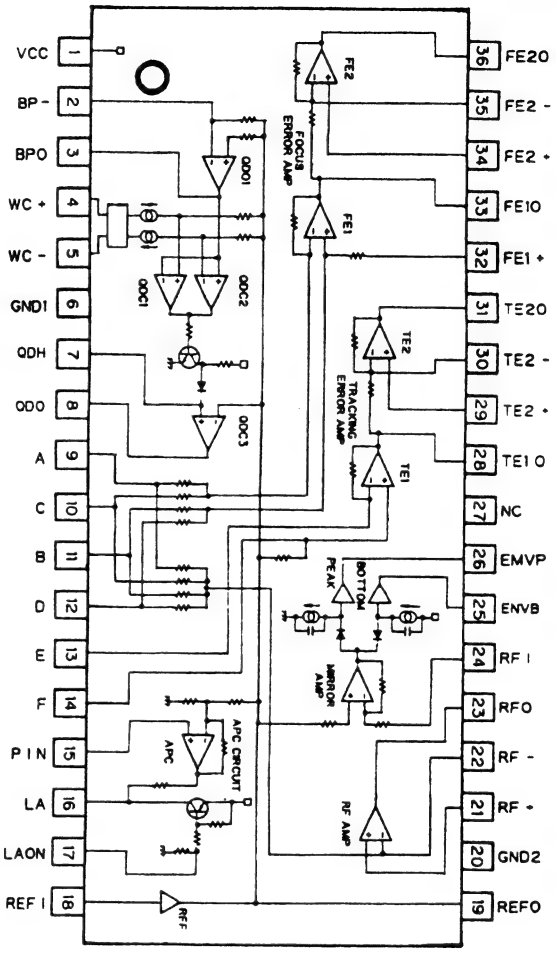

Fig.1 : UPC2571GS BLOCK DIAGRAM

1) Automatic Power Control (APC)

The laser diode's junction voltage varies greatly with temperature ; causing large output variations in optical power. To avoid this, a monitor diode is used in a feedback circuit to keep the optical power constant. As two different manufacturer's laser diodes are used the LD current falls into two broad bands : approx. 40mA and approx. 60mA.

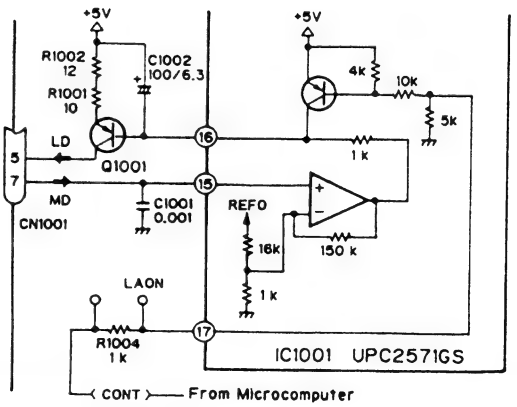

Fig.2 : APC CIRCUIT

2) RF Amplifier

This performs a simple summation of the photo-detector outputs A,B,C & D, amplifies, and equalizes to produce the RF signal at RFO. The RF eye pattern may be monitored here. The RFO OFFSET volume is used to ensure that the RFO waveform has the correct offset relative to the FOK threshold level inside the servo LSI UPD63700GF. The FOK signal is used in the focus close sequence, and during play to control the defect circuit inside the UPD63700GF.

The AC coupled RFO signal, RFI, is used by the UPD63700GF to generate the EFM signal which is used in turn by the DSP spindle CLV control sections.

For low frequency signals :

VRFO = (A+B+C+D) x (R1018+R1019)/10k = (A+B+C+D) x 6.22

The RFO waveform should have an amplitude of approx. 1.9Vpp, with it's upper envelope at +1.1V DC w.r.t. REFO.

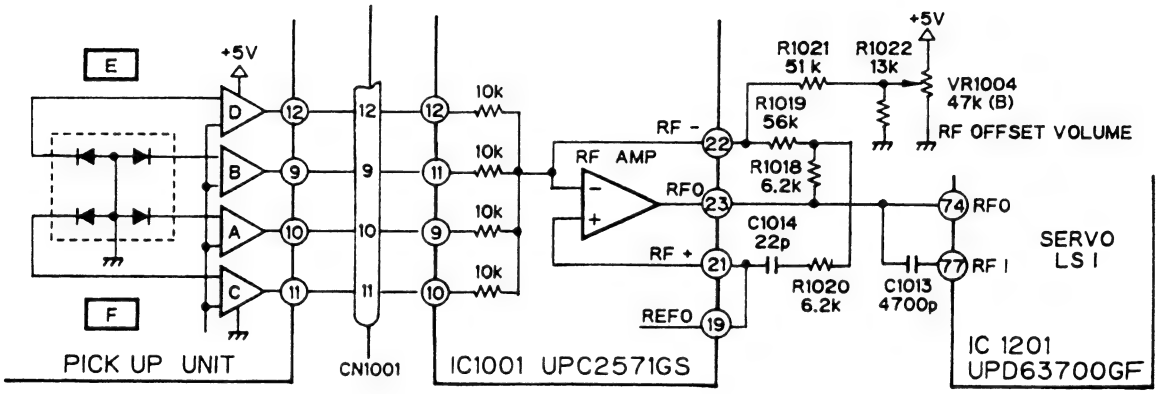

Fig.3 : RFO AMPLIFIER

3) Focus Error Amplifier

This produces a focus error signal used as the basis for the focus servo.

VFEY = ((A+C)-(B+D)) x 5 x (R1007//20k)/10k

= FE x 6.23 (FE = PU unit focus error)

The S-Curve at FEY should have an amplitude of approx. 1.9Vpp.

The second amplifier stage is also a low pass filter, fc=11kHz, and has a bias volume adjustment. This adjustment is used to vary the reference bias level of the focus servo loop and is adjusted to obtain an optimum eye pattern at RFO.

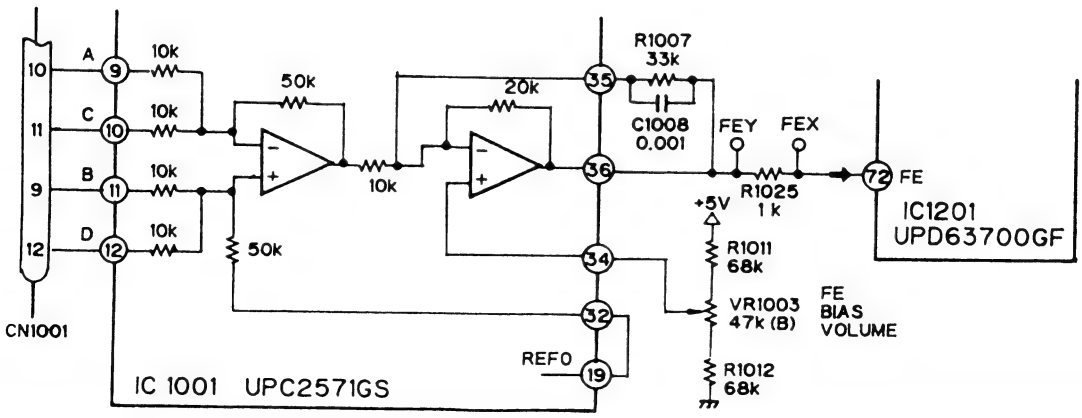

Fig.4 : FOCUS ERROR AMPLIFIER

4) Tracking Error Amplifier

This produces the tracking error signal used in the tracking servo loop.

VTEY = (25 x E) - (25 x F x 2 x 10k / (T.BAL+10k))

Normally, the sensitivity of E & F are the same and T.BAL=10k

=> VTEY = 25 x (E-F)

If, however, the E and F sensitivities are different the T.BAL volume can be used to cancel out the unbalance. The offset adjustment TE OFFSET is to cancel any DC offsets from the photo-detectors or op-amps to ensure the reference bias for the servo loop is at zero. Maladjustment of either of these pre-sets will result in poor tracking performance and susceptibility to skipping.

For a typical unit, the TEY level should be approx. 1.8 Vpp.

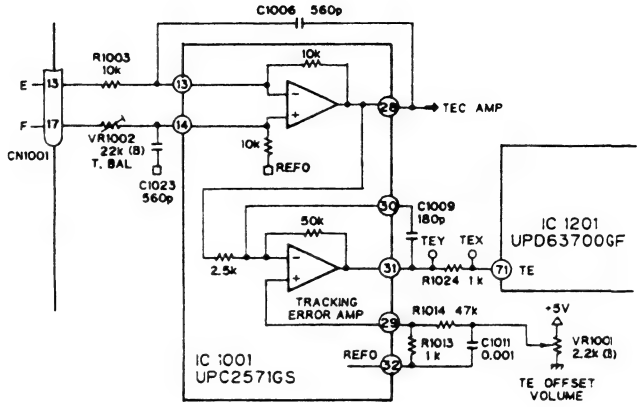

Fig.5 : TRACKING ERROR AMPLIFIER

5) Tracking Zero Crossing Amplifier

TEC1 is basically an amplified, AC coupled, version of the TEY waveform. It is used by the servo LSI IC1201, UPD63700GF to located the zero crossing points of the TEY signal to :

1) Determine how many tracks have been crossed during track jumping or a carriage move operation.
2) Determine in which direction the lens is moving when attempting to close tracking. This is used in the "tracking brake" circuit described later.

For signals in the range 500Hz - 5kHz :

VTEC1 = R1005/R1006 x (E-F) = 45.5 x (E-F)

Typically TEC1 is around 4.2Vpp, this means that the TEC1 signal level may be greater than the saturation limit of the op-amp and the signal will clip. However, since the servo LSI only uses the zero-crossing points, this is not critical.

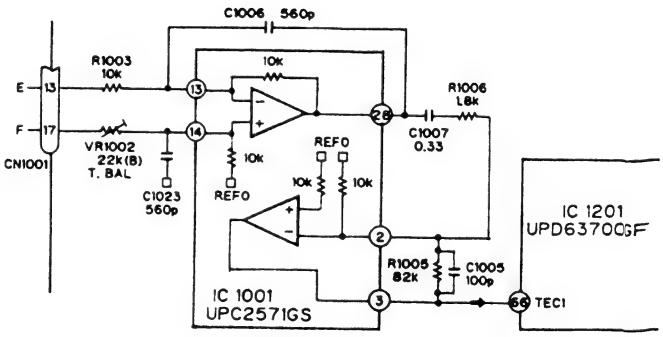

Fig.6 : TRACKING ZERO CROSSING AMPLIFIER

1.2 SERVO STAGE (UPD63700GF)

All the servo equalization & sequencing, such as focus closing, track jumping, carriage moving etc. are performed in this LSI, as well as all the DSP functions : data decoding, error protection, interpolation etc. The signals FE & TE are digitized and processed by the servo block to produce the focus, tracking & carriage drive signals, in a PWM format.

The RFI signal is converted to the EFM signal which is decoded by the DSP block to produce an audio signal ; during this process, a spindle servo error signal is also generated and used by the servo block to produce a spindle drive signal, again in PWM form.
The PWM waveforms are filtered, to remove the PWM carrier, amplified by the driver IC1301 PA3026, and output to the corresponding actuators.

1) Focus Servo System

The main focus equalization takes place inside the UPD63700GF (figure 7). The equalizer response can be measured between FEX and FIN and has the shape shown in figure 8.

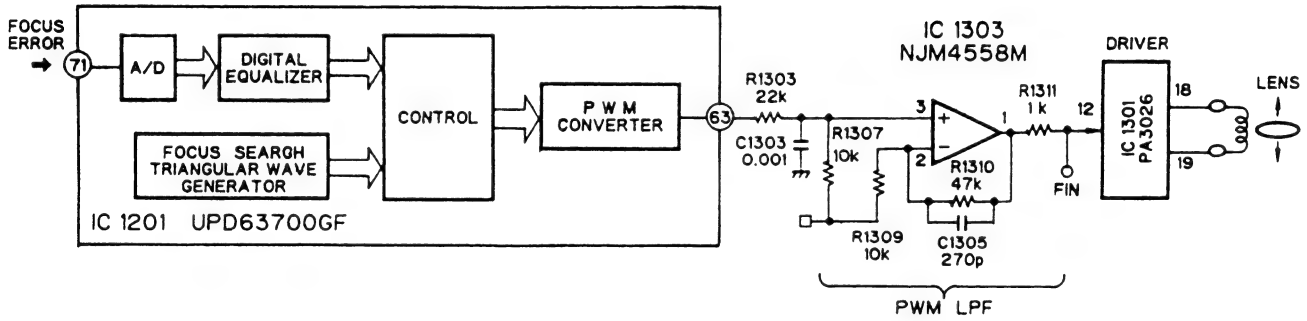

Fig.7 : FOCUS SERVO BLOCK DIAGRAM

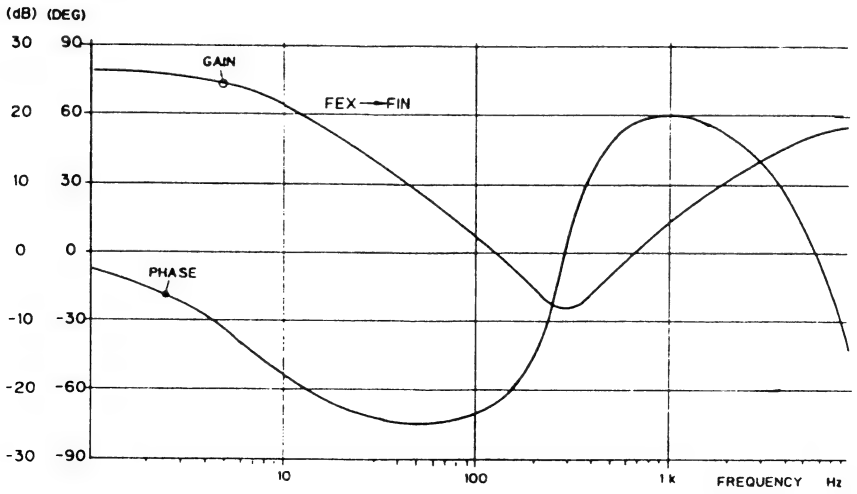

Fig.8 : FOCUS EQUALIZER

In order to smoothly close focus the lens must first be within approx. 5µm of the "just focused" position. This position is achieved by a focus search sequence. The lens is moved up and down using a triangular wave search voltage while the spindle motor is kicked and kept rotating at an appropriate speed. The servo LSI monitors the FE and RFO signals and, at an appropriate point, automatically closes focus.

The conditions for focus close are :

1) The lens is moving from a far to a near position relative to the disc,
2) FOK = HIGH (5V),
3) FZD (IC internal signal) was latched high and
4) FE = 0 (w.r.t. REFO).

When the focus servo closes, the servo LSI's serial data output port, XSO, will show a high-low transition. This is received by the microcomputer as an indication that the servo loop was closed and after about 25mS it begins monitoring the FOK output, via a LPF, to verify that focus is still closed ; in the event of FOK becoming low for an appreciable time, the microcomputer will take appropriate action.

The various signal levels which contribute to focus close are shown in figure 9, which shows the case where focus close has been inhibited.

In TEST MODE, using FOCUS CLOSE MODE 1, conditions 2 & 3 can be inhibited to allow the S-Curve, focus search voltage and the actual lens movement to be observed at ease.

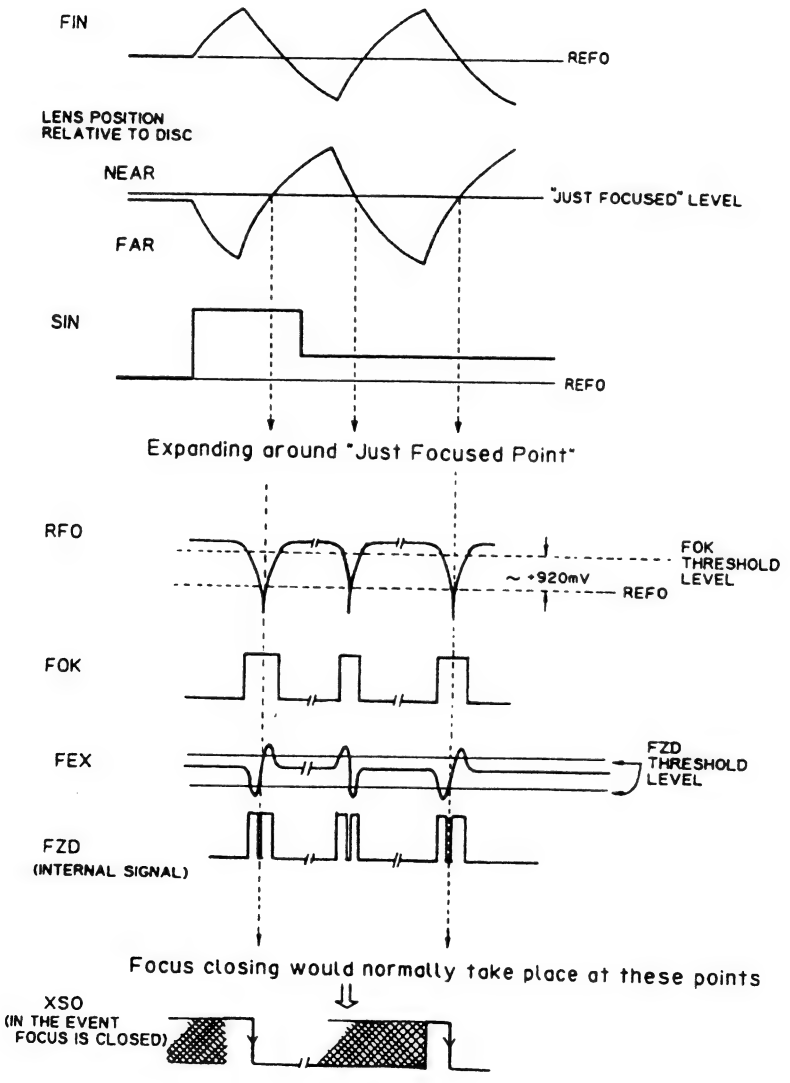

Fig.9 : FOCUS CLOSING SEQUENCE

a) FOK CIRCUIT

The FOK circuit inside the servo LSI compares the lower envelope of the RFO signal with a threshold level fixed by the microcomputer. Should the envelope level fall below this FOK level then FOK becomes high. This is used during focus close as stated and also during play to control a defect circuit, which switches the focus & tracking servos into a hold mode should the RFO envelope become disrupted by dirt, grease etc, thus increasing the player's defect response (figure 10).

The FOK threshold is approx. +920mV w.r.t. REFO. It is for this reason that the upper envelope should be adjusted to +1.1V DC w.r.t. REFO.

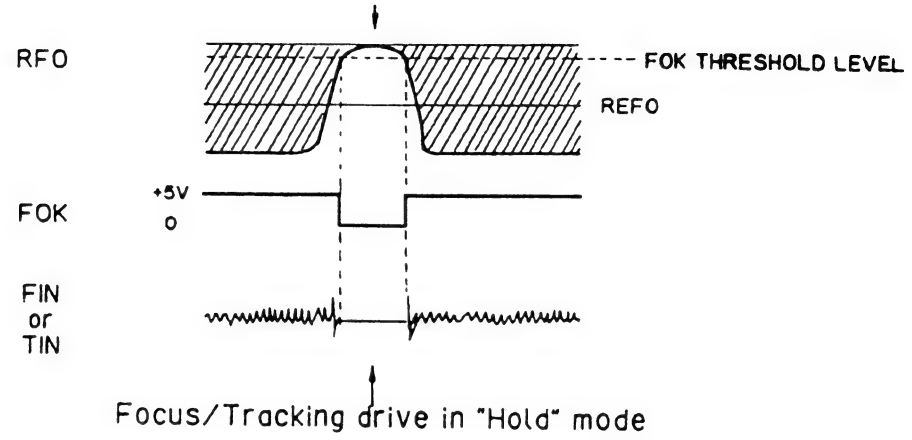

Fig.10 : DEFECT CIRCUIT

b) FZD CIRCUIT

The FZD circuit inside the servo IC compares the absolute value of the FE signal to a threshold value and outputs a high/low signal which is then used in the focus close sequence as stated.

At power on, the microcomputer switches the laser diode off and reads the value of the FE bias via the servo LSI's A/D port. The FZD threshold is set 200mV above this bias level.

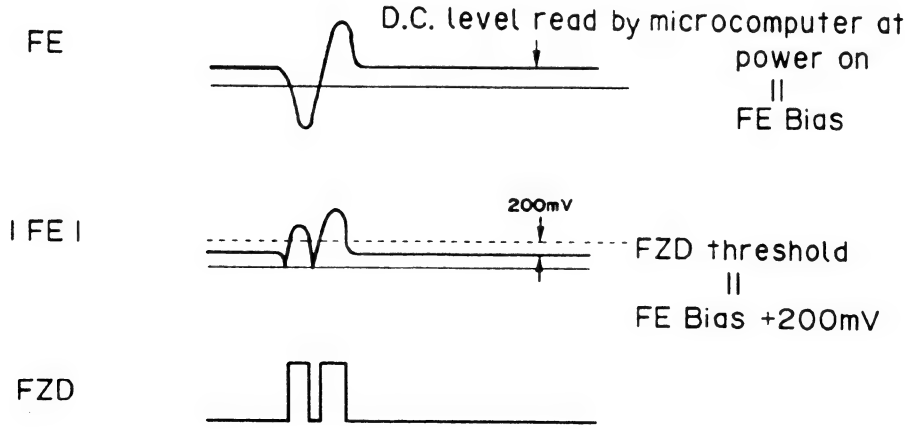

Fig.11 : FZD CIRCUIT

2) Tracking Servo System

The main tracking equalization takes place inside the UPD63700GF (figure 12). The equalizer response can be measured between TEX and TIN and will have the shape shown in figure 13.

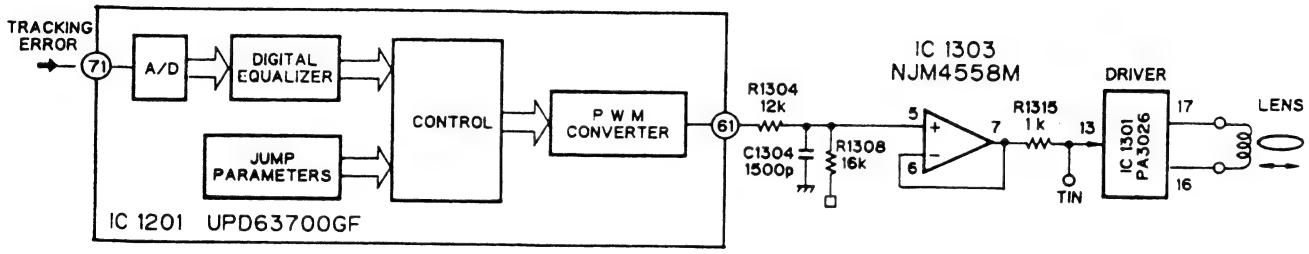

Fig.12 : TRACKING SERVO BLOCK DIAGRAM

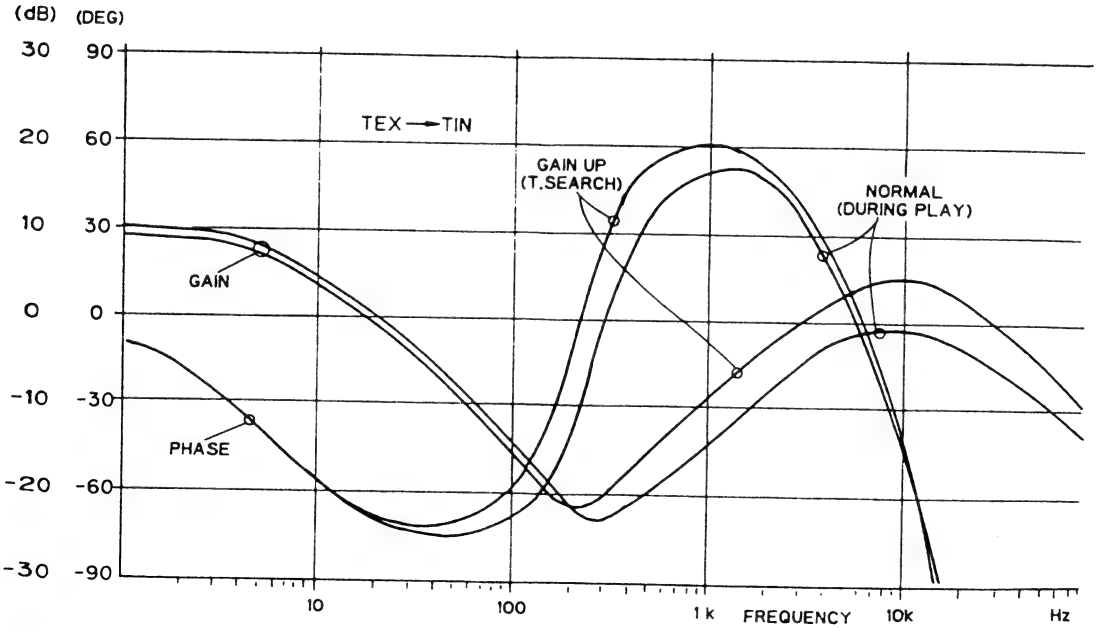

Fig.13 : TRACKING EQUALIZER

a) Track Jumping

Track jumping is performed automatically by the servo LSI upon receipt of the appropriate command from the microcomputer. The present microcomputer is programmed to use 1,4,10 & 32 track jump commands to achieve searching. The 32 track jump command may be used in pairs (64 tracks) or triplets (100 track) as required. In TEST MODE the 1,4,10,32 & 100 track jump and carriage move sequences may be observed by selecting the appropriate mode.

Note that the number of tracks jumped is controlled by setting an internal counter to half the total value and then counting this down using the zero crossing edges of TEC1. Once the counter is at zero, a brake pulse of fixed duration is output to bring the lens to a halt; allowing tracking to be closed and normal play to continue.

For a fixed period of time after a multi-track jump has been performed, a "tracking brake" circuit is activated in conjunction with a "gain-up" equalizer to ensure that the servo achieves stabilization before entering normal play.

Manual track search, in normal mode, uses a group of single track jumps to achieve FWD/REV at approx. ten times normal play speed.

The figures 14 & 15 show the timing charts for the single and multiple jump commands.

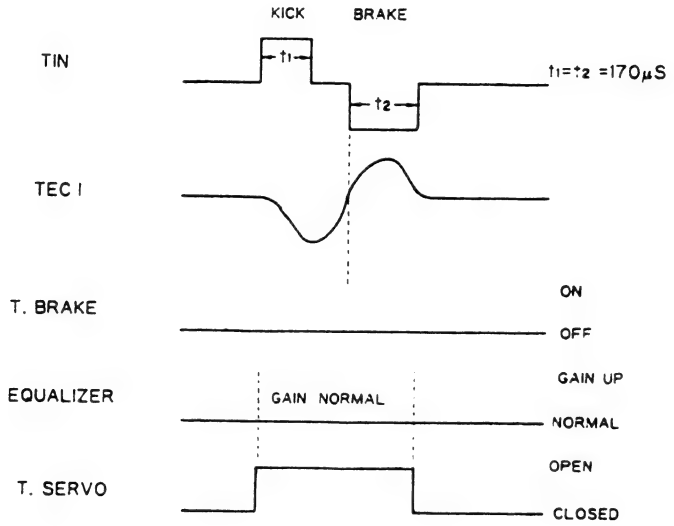

Fig.14 : SINGLE TRACK JUMP

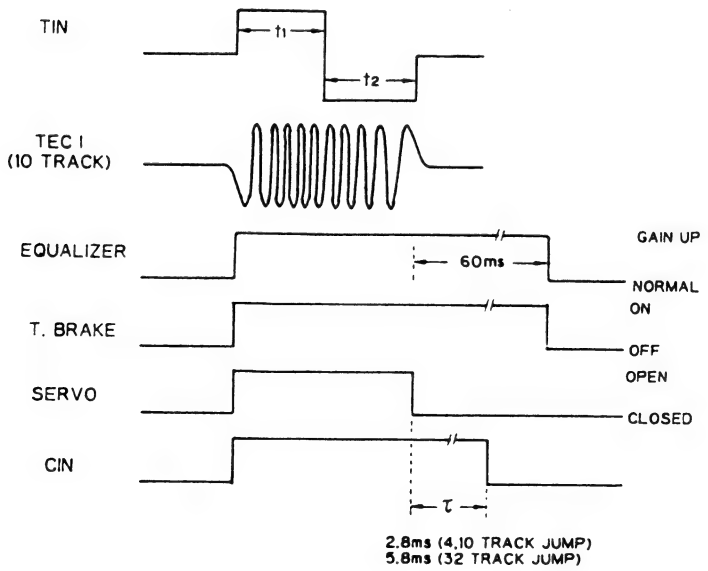

Fig.15 : MULTI TRACK JUMP

b) Tracking Brake Circuit (Figure 16)

This relies on determining which direction the lens is moving and only outputting the portion of the drive waveform which acts to oppose this motion. Direction of motion is deduced from TEC1 and the MIRR signal and knowledge of their phase relation.

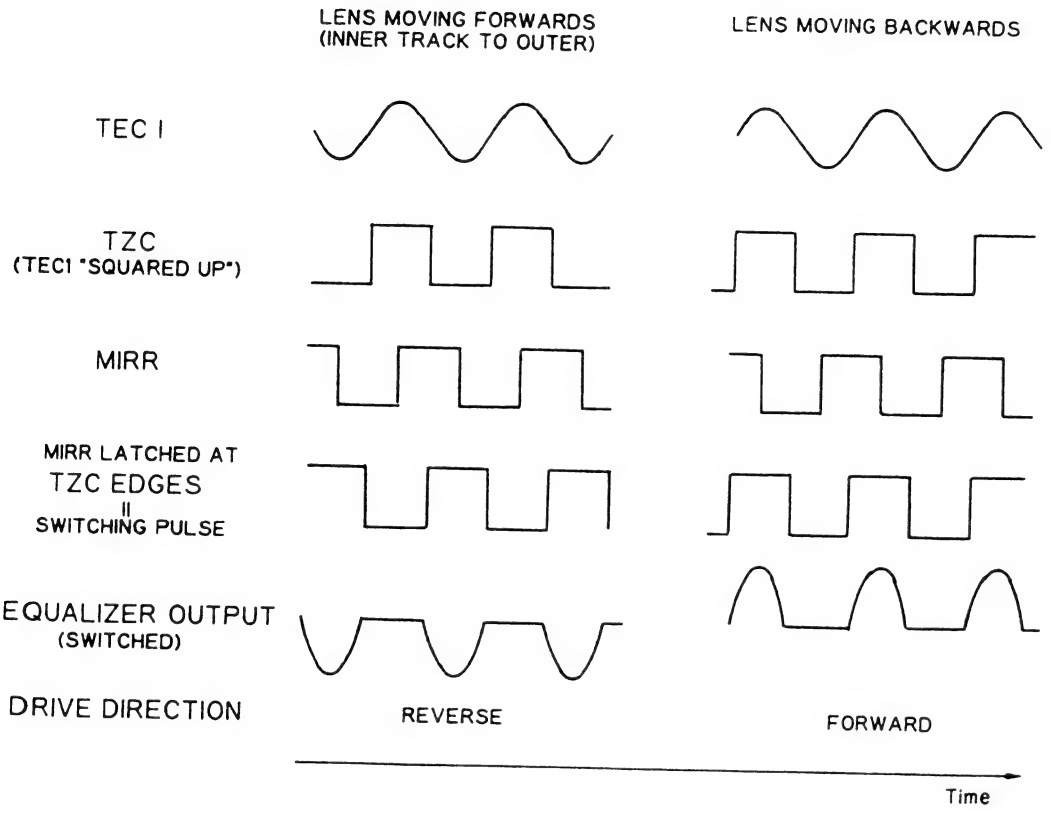

Note : Equalizer output assumed to have same phase as TEC1.

Fig.16 : TRACKING BRAKE CIRCUIT

c) MIRROR Circuit

The MIRR circuit indicates if the laser beam is on or off track.

MIRR = 'H' => off track, MIRR = 'L' => on track.

MIRR is generated by detecting the upper and lower envelopes of the RFO waveform and producing a difference signal which is then compared with a peak-held version of itself to determine if the envelope size has dropped below a certain percentage.

If so, this is assumed to be due to the beam going off-track ; in practice dirt on the disc can also give the same effect (see figure 17).

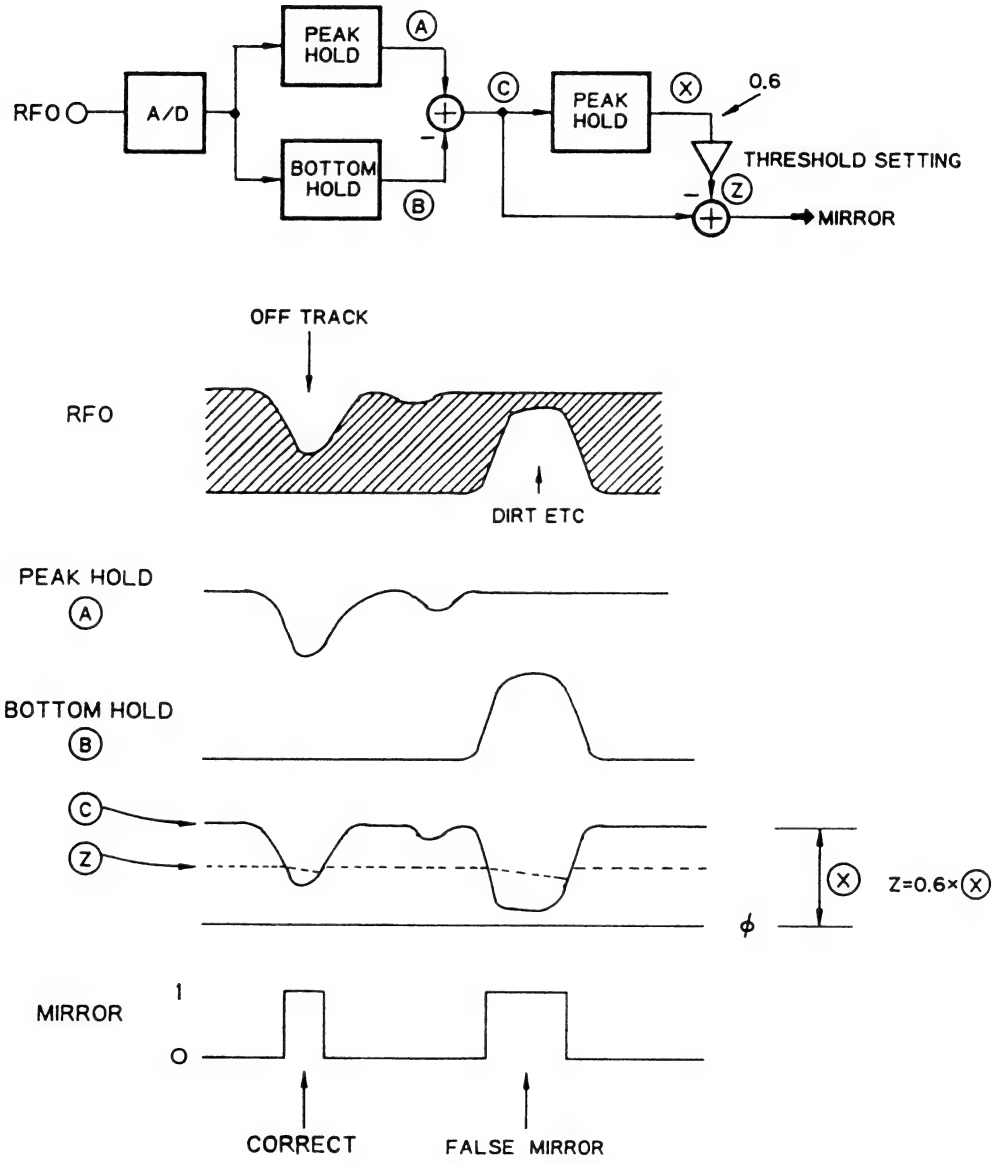

Fig.17 : MIRROR CIRCUIT & SIGNAL DIAGRAM

3) Carriage Servo System

The carriage servo system takes it's input from the low frequency component of the tracking equalizer output. This is amplified and equalized, and the output fed to the carriage motor via the PWM converter, LPF and driver IC. The gain of the equalizer is set so that when the lens is offset from it's center by a set amount the voltage at the carriage motor is enough to overcome friction and move the carriage forward.

Because the carriage motor will only begin moving when the applied voltage is great enough to overcome friction the drive voltage is cut-off inside the servo LSI until it reaches an appropriate level ; thus saving on wasted power dissipation.

Due to eccentricity of the disc etc. the threshold level may be crossed several times before the carriage assembly actually moves. This can result in a series of pulses being applied to the carriage motor.

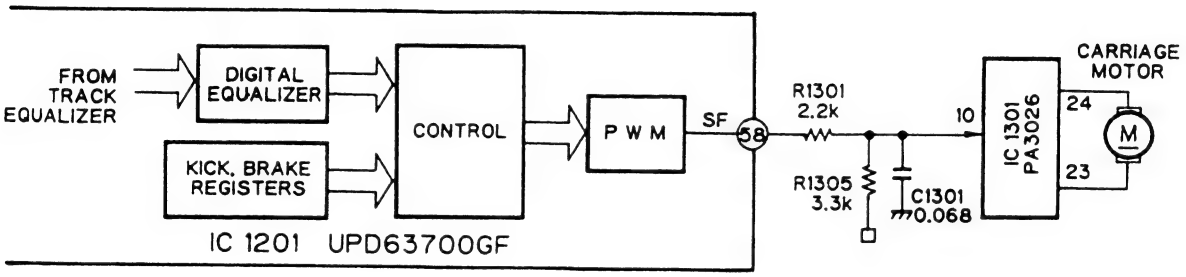

Fig.18 : CARRIAGE SERVO CIRCUIT

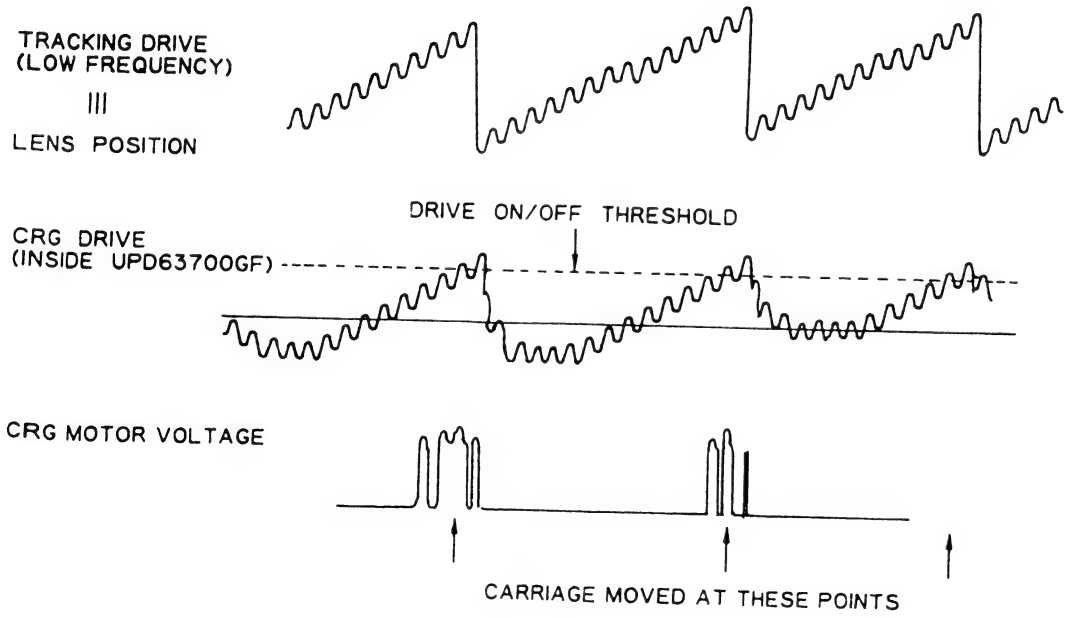

Fig.19 : CARRIAGE WAVEFORM

4) Spindle Servo

The spindle servo has a number of different modes :

(i) Kick : Used at set-up to bring the spindle up to speed from stand-still.

(ii) Offset : This is used i) At set-up, after spindle kick and before AGC has finished.
ii) During play if focus is suddenly disrupted.

(iii) Adaptive Servo : This is the CLV mode which ensures that the linear velocity of the disc as seen by the laser spot is kept constant. During play, a timing signal is extracted from the EFM signal and used to generate speed and phase error signals. These error signals are summed and fed into a servo equalizer to produce a drive signal via the PWM converter.

(iv) Brake : This is used to bring the disc to a stop quickly, for ejection or when CD source is de-selected or for any other reason. The servo LSI puts out a brake level and monitors the EFM signal. When the longest pattern in the EFM signal is longer than a fixed amount an internal flag is set. By monitoring this flag the microcomputer can judge when the disc has stopped and proceed to eject etc. If this flag is not set within a certain time limit the servo is switched to STOP mode and eject is implemented after a wait period.

(v) Stop : This occurs at power on or during disc eject. The spindle motor voltage is zero.

(vi) Rough : This is used in normal mode to control the linear velocity of the disc when the carriage is being moved for fast access. A speed signal is deduced from the EFM waveform and input to the spindle equalizer. This mode should be used in TEST MODE to perform the grating adjustment.

a) EFM Comparator

This circuit 'squares' up the analog RF signal into a digital EFM signal. In order to ensure minimum errors it is necessary to use a feedback circuit to match the DC level of the threshold to the center of the RF waveform. This circuit (shown in the spindle servo block diagram) uses the fact that the EFM signal should have no DC component. By feeding back the EFM signal's DC level the threshold level changes until the DC level is zero and the threshold, by definition, is at the exact center of the RFI waveform. The filtering in the feedback has been adjusted to ensure minimum error.

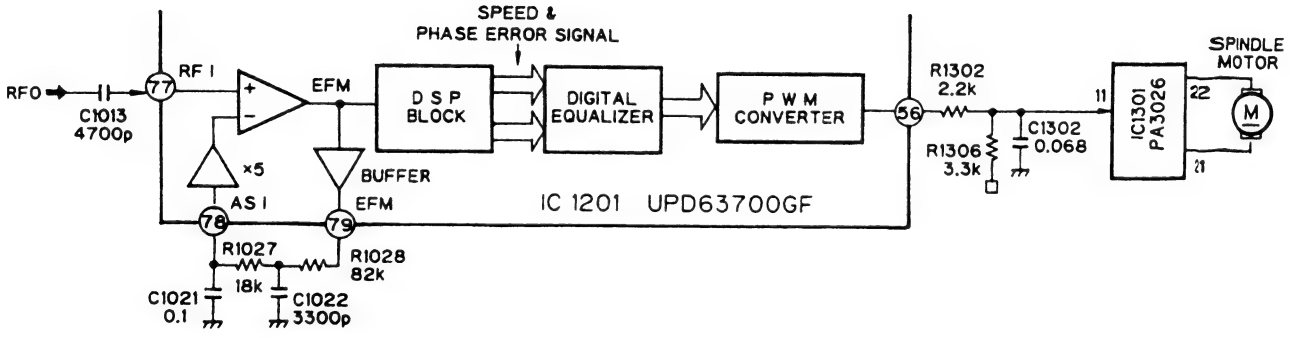

(EFM Compalator Circuit)

Fig.20 : SPINDLE CIRCUIT

• Normal Mode

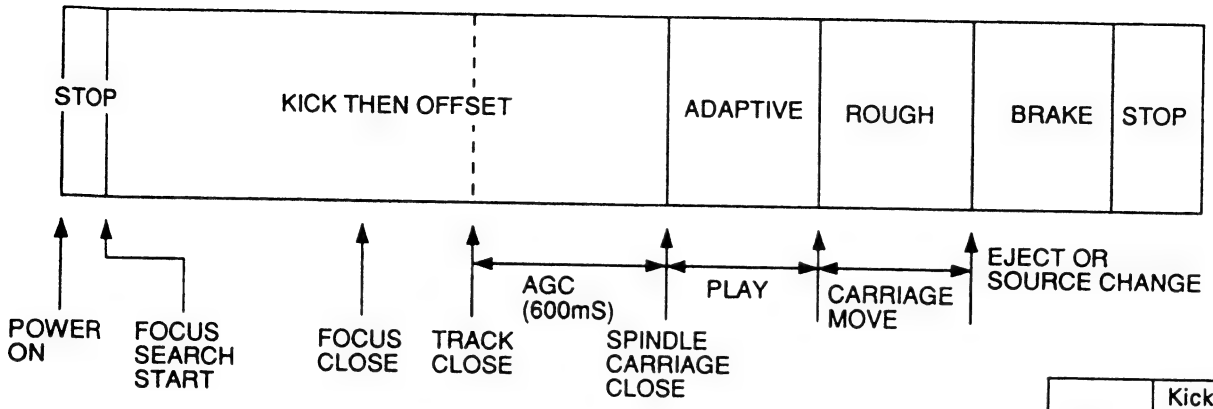

	Kick Time
12cm	800mS
8cm	300mS

• Test Mode

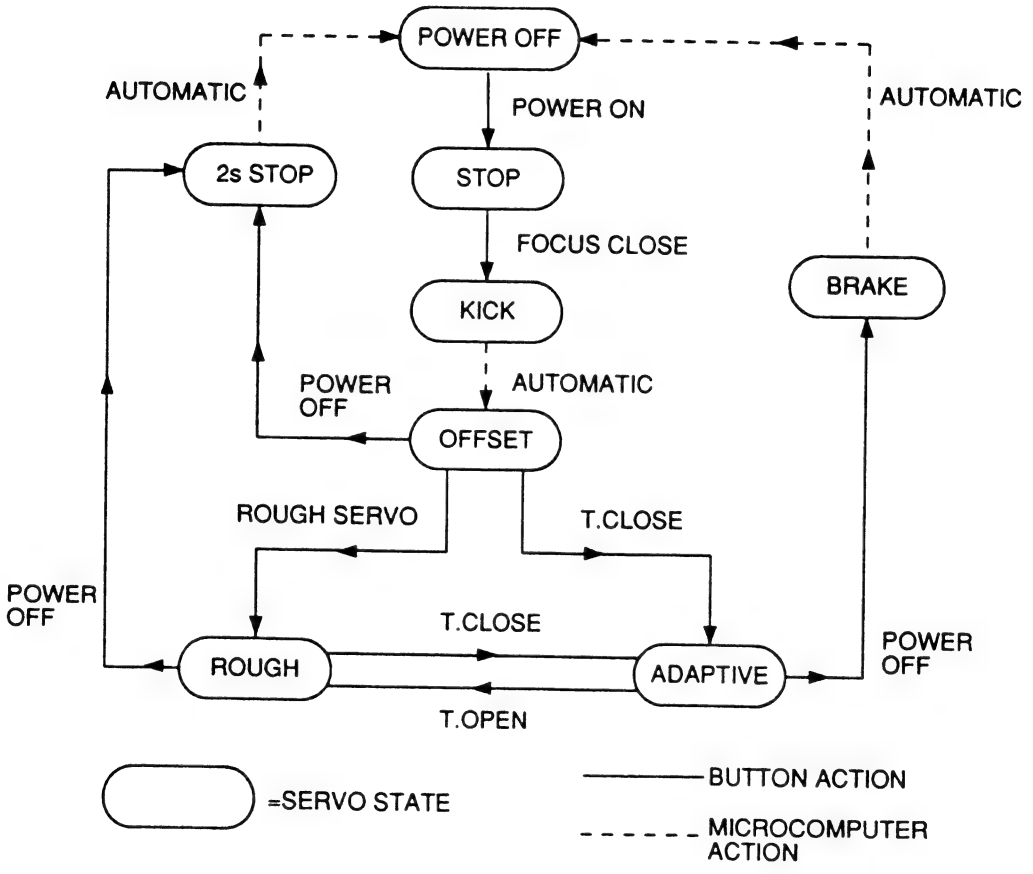

Fig.21 : SPINDLE SERVO MODES

5) Automatic Gain Control (AGC)

The servo LSI UPD63700GF contains a new function which allows the microcomputer to automatically adjust the gain of the focus and tracking servos every time a new disc is inserted or the CD source is selected.
The block diagram of the AGC circuit is shown in figure 22. Basically, a small disturbance signal is inserted into the servo loop at a fixed frequency and the response of the loop is measured via the filtered signals G1 and G2. For a properly adjusted servo loop the amplitudes of G1 and G2 should be equal. The microcomputer reads in these values, does a simply calculation and adjusts the loop gain appropriately.
In order to achieve a high degree of accuracy this adjustment is performed a number of times.
As long as there is power supplied to the microcomputer it remembers the previous adjustment point and uses this as a starting point. Thus, should the system degrade with time (actuator sensitivity, dirt build-up, circuit degradation etc.) the microcomputer can follow this trend and keep the loop gain optimized.
If power to the microcomputer is removed, it forgets the previous adjustment point and assumes a default value.

At shipping the CD player will be within 5dB of this default and no problems should occur. For an older player however this is not so and it is possible that servo closure may not take place immediately. In this case, the microcomputer adjusts the gain 'blind', searching for a stable point.
In TEST MODE, the result of the AGC can be monitored. Once tracking close (with AGC) has been performed the set can be made to display the present value of the gain block. The default value is displayed as '20', which is the value a typical PU unit, PCB & test disc would result in. If for some reason the loop gain had dropped by, say, 6dB (1/2 the typical value) then the gain block will be adjusted during AGC to twice it's default value ; resulting in a gain of '40'. Similarly a set with a loop gain twice the typical will display '10' as the present gain.
Using this, it is possible to 'measure' the loop gain of the servo without the need for any instrumentation. The players shipped from the factory are checked with a test disc so that the value of the gain block after AGC is within the range 11 - 45.

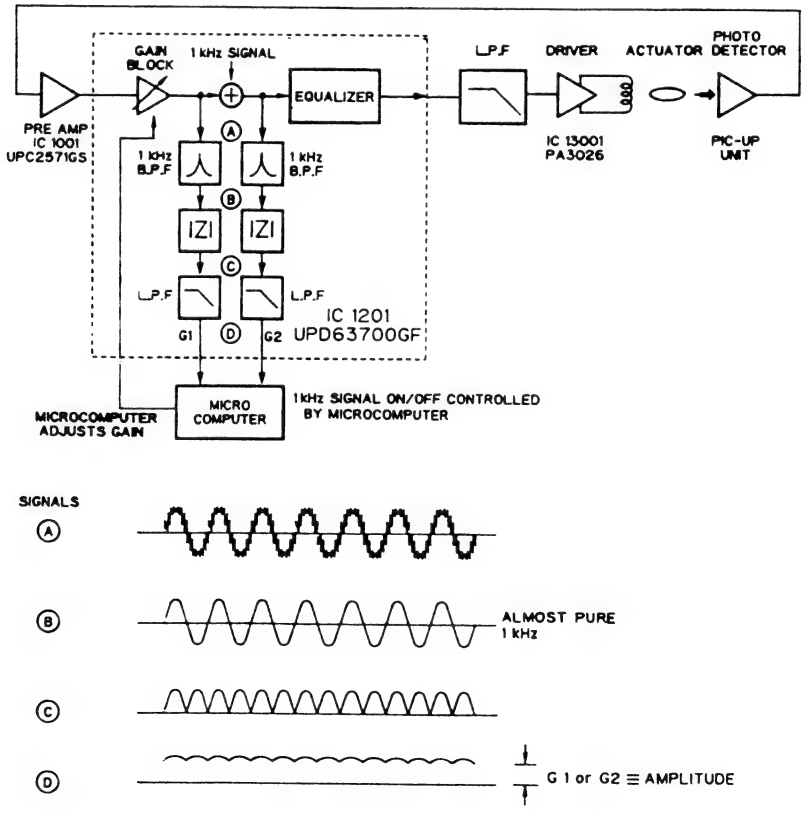

Fig.22 : AGC BLOCK DIAGRAM

6) Power Supply & Loading Motor

Figure 23 shows the block diagram of the power supply and loading motor.

The CD module receives VD (9V) and splits this up into BVD (8.3V), VM (7.6V), and V1 (7.0V) which supply the 4ch servo driver, loading motor and 5V regulator respectively. VD is also used directly by the disc detection LED's. The 4ch driver and laser diode are enabled by the CONT line from the microcomputer. The 5V supply to the servo LSI, pre-amp and audio circuits is enabled by the CD5VON line. The loading motor has no separate enabling input ; the control lines LOAD and EJ serve the same purpose.

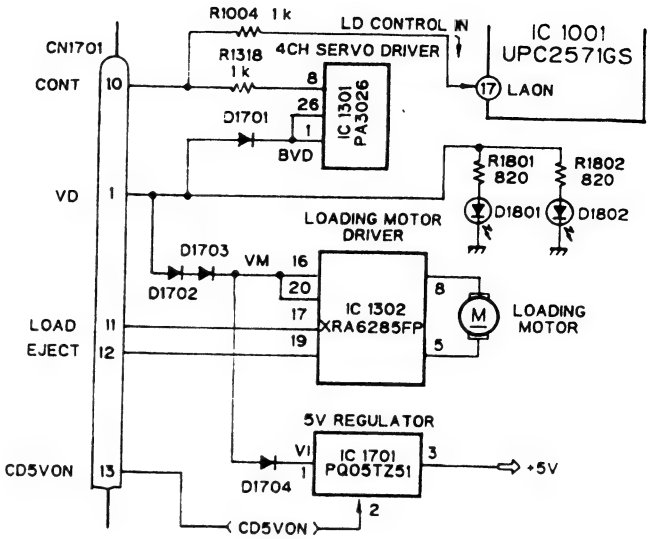

Fig.23 : POWER SUPPLY & LOADING MOTOR

2. MECHANISM DESCRIPTION

● Disc Loading

1.There are two photo transistors in front and behind the rubber roller that convey the disc, and two corresponding LEDs mounted on the unit pcb.
(When the LEDs light, the photo transistor voltage is L.)

2.When the disc is inserted to a point in front of the rubber rollers, a H voltage is recorded on the photo transistor in the front section(P1) and the loading motor starts.

3.The motor drive is transmitted via the gears, the rubber rollers revolve, and the disc is conveyed.
The rubber rollers are held on the tip of the loading arm by the strength of the loading arm spring, and the guide arm is in the raised position.
This gives the guide arm and rubber roller a suitable adhesive strength to push forward the disc which is positioned between them.

4.The clamper arm distinguishes the size of the disc and has a centering mechanism which clamps the disc in the center of the spindle motor.

The centering arm and centering lever are a single unit on top of the clamper arm, which keeps the fulcrum movement centered.

Centering pins and lock arms are attached to the tips of the centering arm.

The centering pins are positioned so that when an 8cm disc is positioned above the spindle motor it's external edge touches the pins. Lock arms revolve around the centering pins. For an 8cm disc it is locked in place by the clamper arms. For a 12cm disc, the lock is released and moves according to the broken line in figure 25.

The position of the detect arm which is mounted on the centering arm at the bottom right of the figure differs for 8cm and 12cm discs. When a disc is positioned above the spindle motor the detect lever, which moves in a clockwise direction on the outside edge, moves to the lower section of the figure.

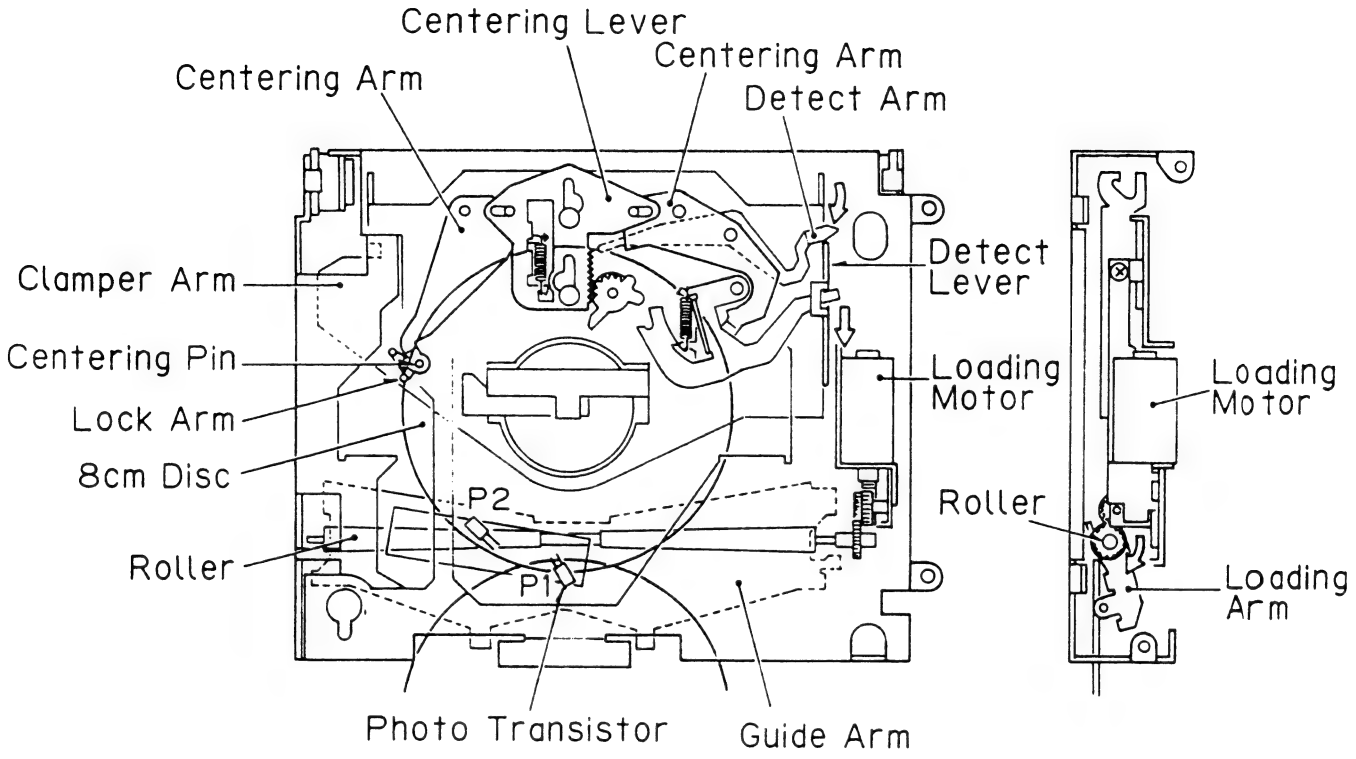
Centering Lever
Centering Arm
Centering Arm
Detect Arm
Clamper Arm
Detect Lever
Centering Pin
Loading Motor
Lock Arm
8cm Disc
P2
Roller
P1
Roller
Loading Motor
Loading Arm
Photo Transistor
Guide Arm

Fig.24

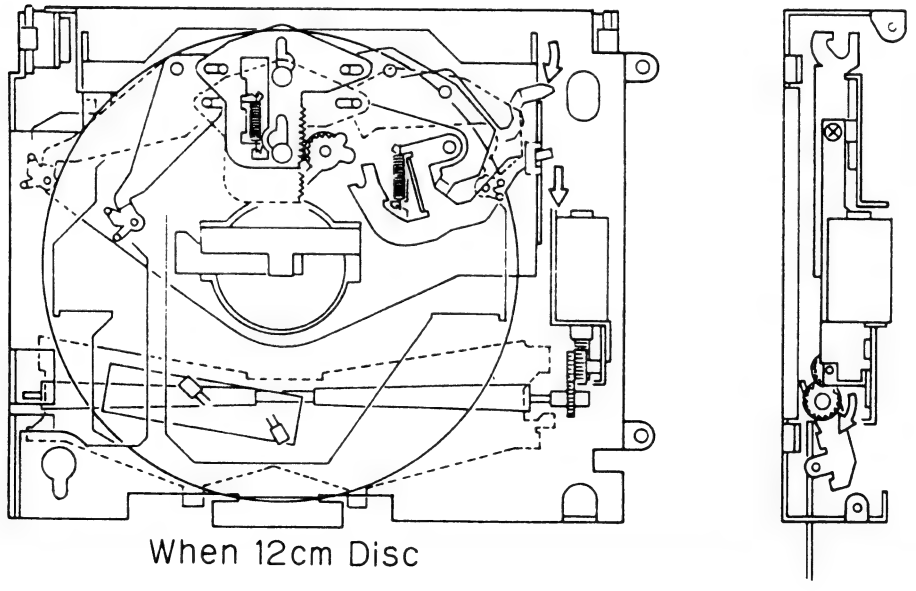
When 12cm Disc

Fig.25

● Clamp Operation

1.The rack gear in contact with the detect lever is engaged with the gear driven by the loading motor, thereby moving the L arm in the arrow direction.
The clamper arm, which had been raised by the L arm, moves down and clamps the disc.

The lock lever which interlocks with the L arm moves the loading arm.
As a result, the rubber roller is pushed down, leaving the disc. At the same time, the guide arm moves down, too. At the position where the lock lever turns the clamp switch on, loading comes to an end.

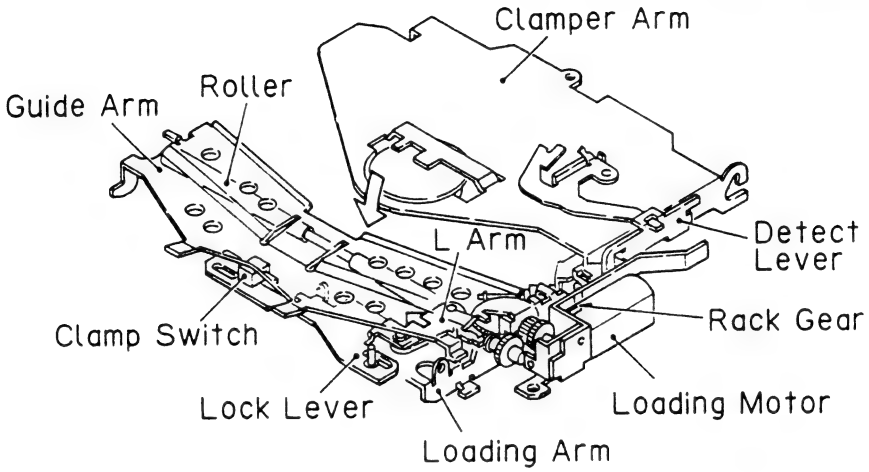

Fig.26

● Mechanism Lock

1.In the eject condition two lock arms are positioned in the frame hole and the front side of the floating section is locked in both vertical and horizontal directions.

The L arm moves the rotating lock lever to the left. The mechanical lock arms L and R move in the directions designated by the arrows and the floating section is released from the frame.

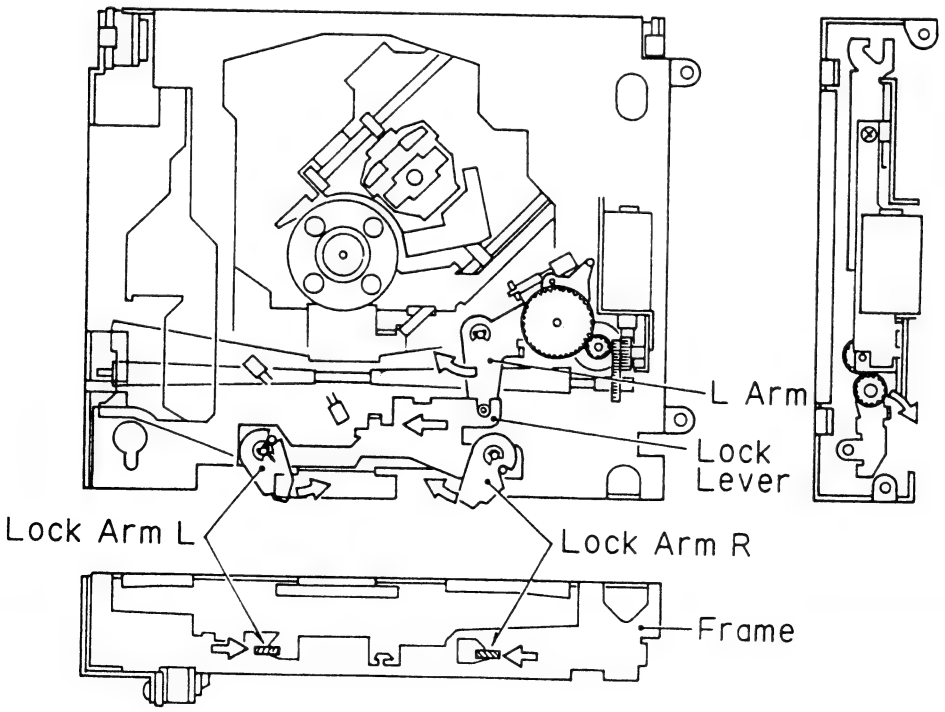

Fig.27

● Eject

1.The eject mechanism operates by reversing the rotation which takes place when the loading motor loads. The L arm moves and operates the mechanical lock, the clamp is released, the roller is applied, and the disc is conveyed. In the case of a 12cm disc the loading motor stops at the position at which the photo transistor lights at the rear of the rubber roller section.

However, in the case of an 8cm disc, motor revolution stops after a fixed period of time. In this process the disc type is recognized during play, by the voltage of the photo transistor(P1) located in front of the rubber rollers.

3. DISASSEMBLY

● How to Remove the Dampers

(Fig.28)

1. While keeping the CX-540 powered on, insert a disc and put it into play mode (with the arm unit lowered).
2. Power off the CX-540 while in play mode.
3. Unplug the connector and remove the CX-540.

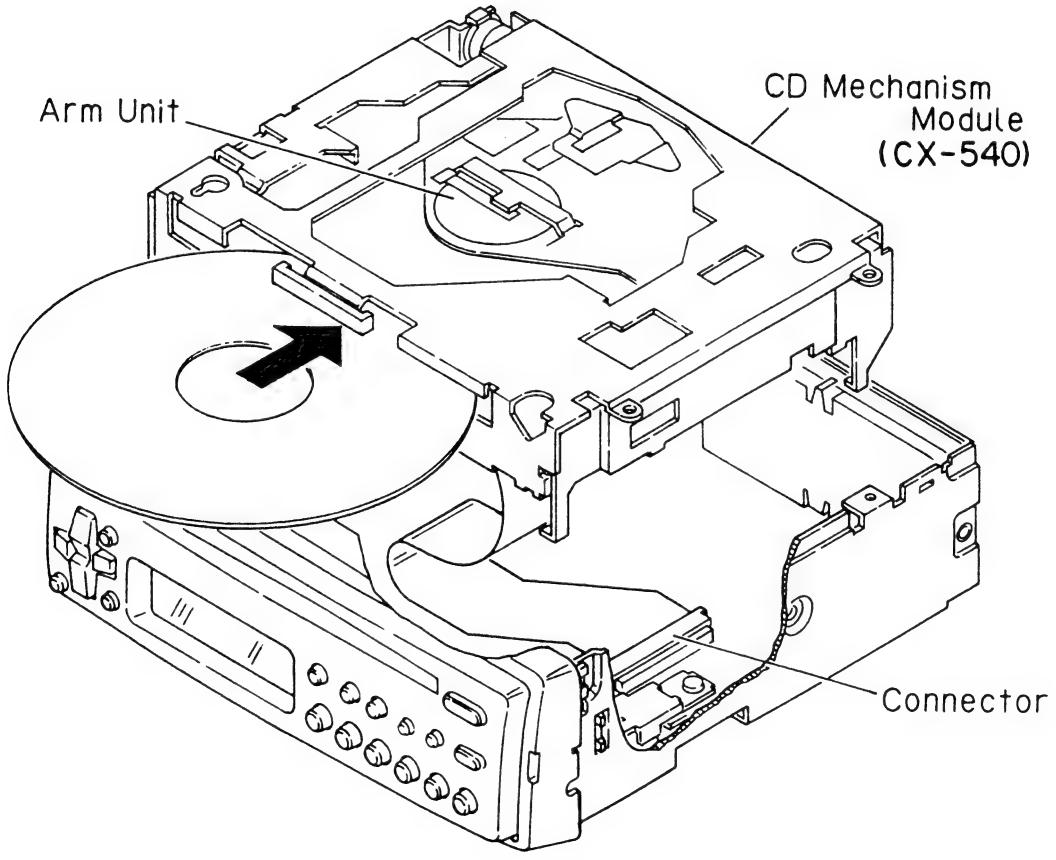

Fig. 28

(Fig.29)

4. Unfasten the four screws marked with arrows.
5. Unfasten the two screws A and remove the frame.
6. Unfasten the two screws B and remove both damper and holder at the two locations.

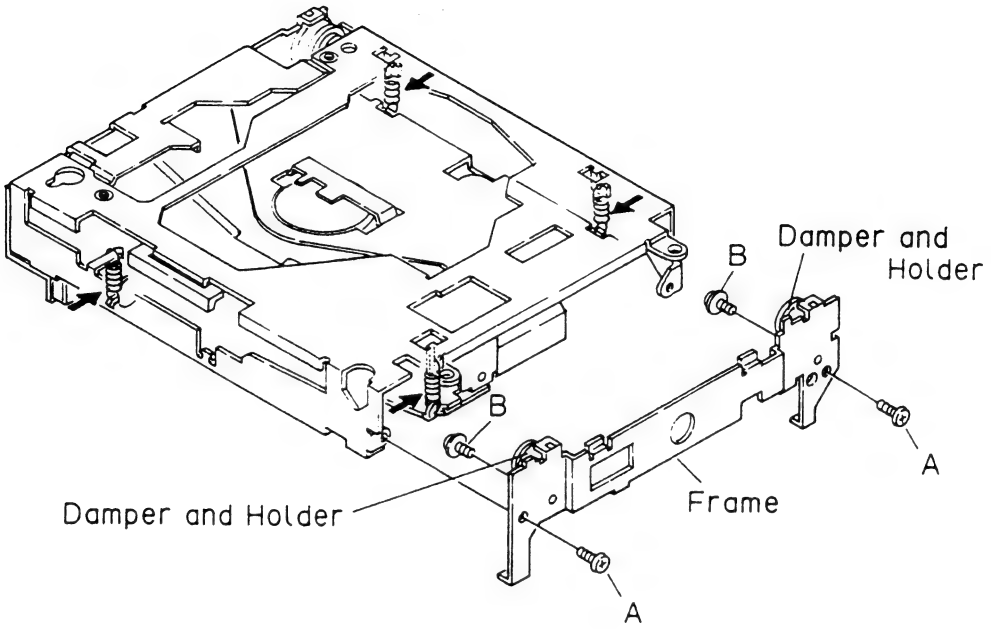

Fig.29

(Fig.30)

7. Remove the frame unit.
8. Unfasten the two screws and remove both damper and holder at the two locations.

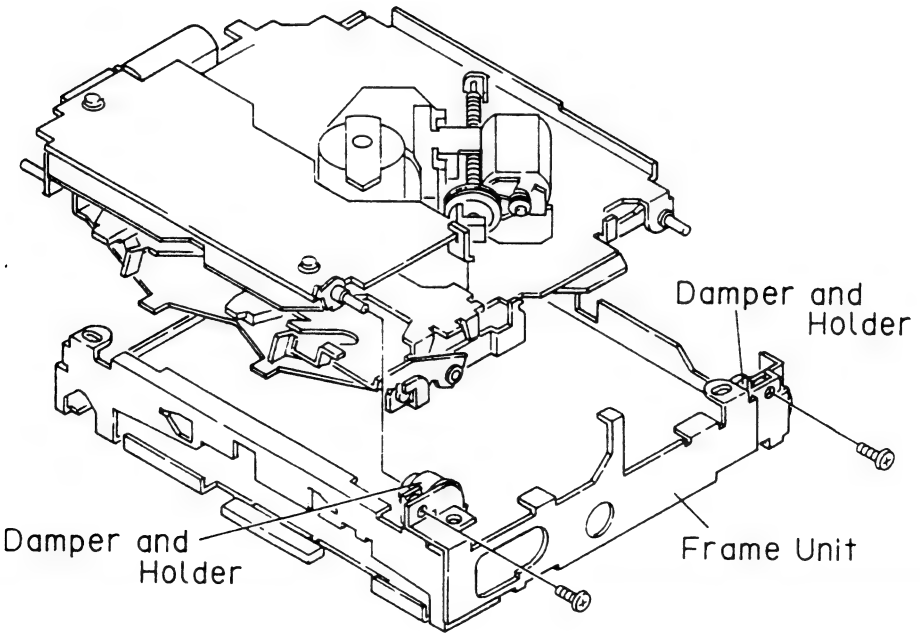

Fig.30

● How to Remove the Spindle Motor

(Fig.31)

1. Remove spring A as marked with an arrow.
2. Remove springs B and C and the arm unit.
3. Remove spring D and the lever.
4. Turn the support wheel so that the screw head becomes visible through the hole.
5. Unfasten the two screws and remove the spindle motor.

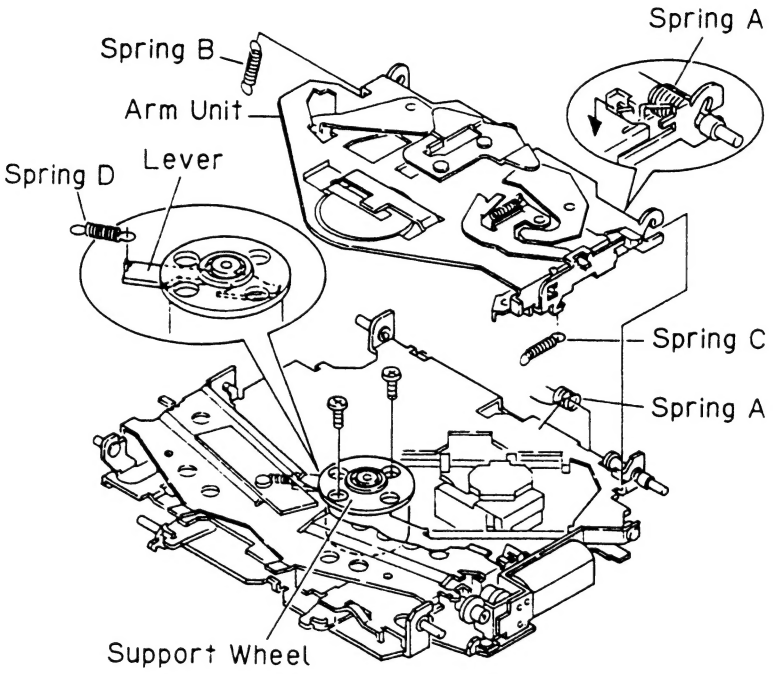

Fig.31

● How to Remove the Loading Motor

(Fig.32)

1. Remove the washer and the arm.
2. Remove the spring.

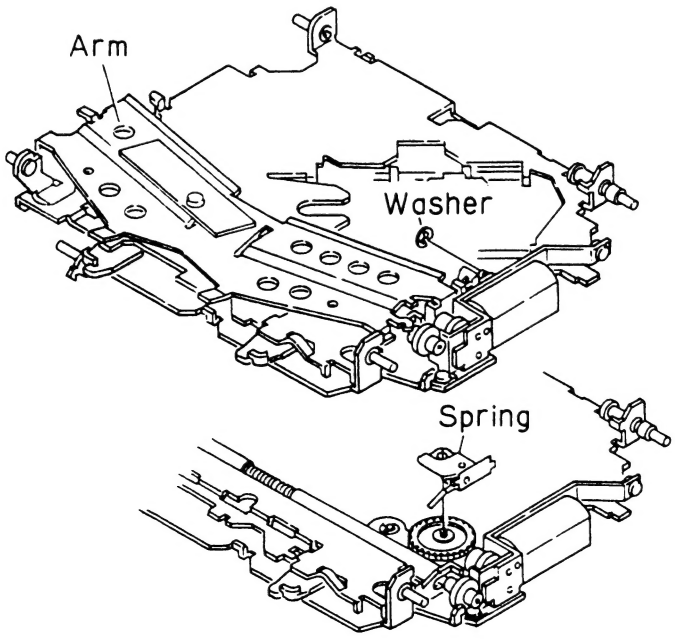

Fig.32

(Fig.33)

3. Unfasten the two screws and remove the bracket unit.

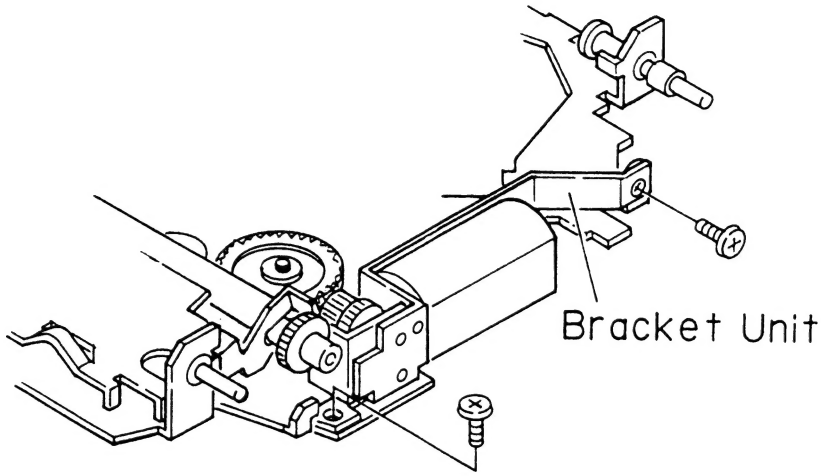

Fig.33

(Fig.34)

4. Unfasten screw C and remove both gear unit and gear.
5. Unfasten the two screws D and remove the loading motor.

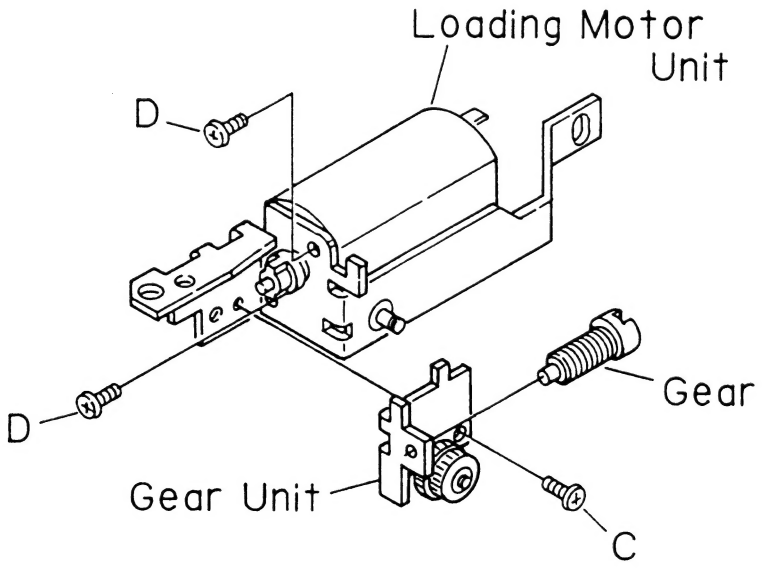

Fig.34

● How to Remove the PU Unit and the Carriage Motor

(Fig.35)

1. Latch spring E as marked with an arrow in the illustration.
2. Attach a short pin to protect the PU unit.
3. Unplug the connector.
4. Unfasten the screw and remove spring F.
5. Remove the PU unit.

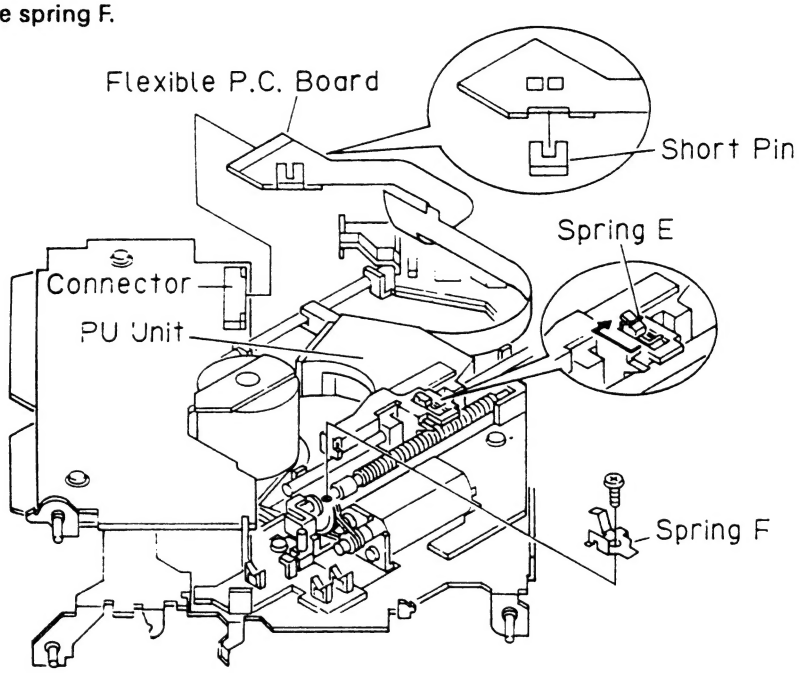

Fig.35

(Fig.36)

6. Unfasten screw E and remove the holder, belt and screw unit.
7. Unfasten the two screws F and remove the carriage motor.

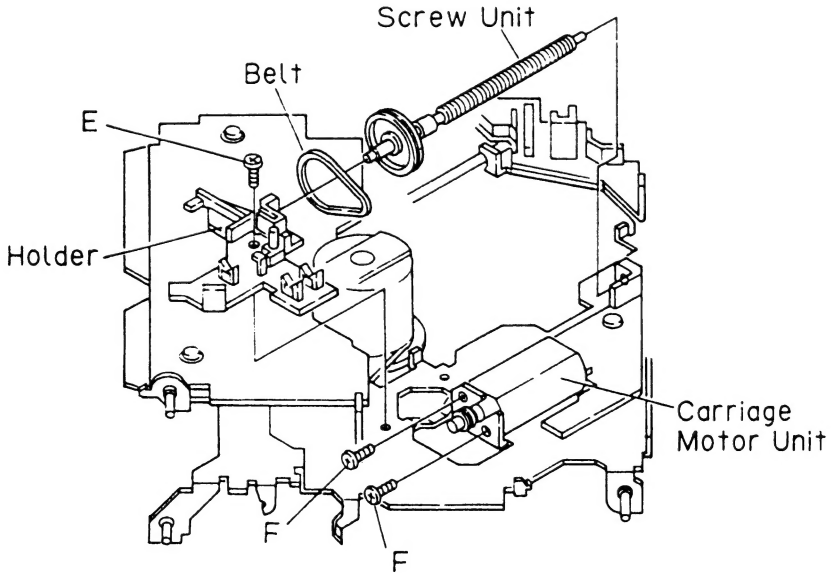

Fig.36